ECX Enclosed Control

3.1 *XT* IEC Power Control

Non-Metallic Enclosure—Contactors and Starters

- Product Description V10-T3-2
- Features and Benefits V10-T3-2
- Standards and Certifications V10-T3-2
- Catalog Number Selection V10-T3-3
- Cover Control Options V10-T3-3
- Product Selection V10-T3-4

Metallic Enclosure—Contactors and Starters

- Product Description V10-T3-8
- Features and Benefits V10-T3-8
- Standards and Certifications V10-T3-8
- Catalog Number Selection V10-T3-9
- Cover Control V10-T3-10
- Product Selection V10-T3-13
- Wiring Diagrams V10-T3-34

Combination Motor Controllers

- Product Description V10-T3-37
- Features and Benefits V10-T3-37
- Standards and Certifications V10-T3-37
- Additional Reference V10-T3-37
- Catalog Number Selection V10-T3-38
- Cover Control V10-T3-39
- Product Selection V10-T3-40

IEC Non-Metallic Enclosure—Contactors and Starters

Contents

Description	*Page*
Non-Metallic Enclosure—Contactors and Starters	
Catalog Number Selection	**V10-T3-3**
Cover Control Options	**V10-T3-3**
Product Selection	**V10-T3-4**
Metallic Enclosure—Contactors and Starters	**V10-T3-8**
Combination Motor Controllers	**V10-T3-37**

Non-Metallic Enclosure—Contactors and Starters

Product Description

XT non-metallic 4X starters are the latest addition to our broad line of pre-engineered solutions that make it easy to get an enclosed starter fast! These sturdy, uncomplicated staters are economical, but built to last. Components are all housed in a dust-tight, rain-tight, oil-tight, water-tight and corrosion resistant polycarbonate insulated enclosure. In most cases, ***XT*** non-metallic 4X starters are available from stock for next day delivery.

Reliable Protection

Each starter features an Eaton ***XT*** IEC thermal overload relay. Fourteen overload sizes are available to complete the starter, providing adjustable settings for 0.1 to 32 full load amps. Because of its direct mount design, the ***XT*** relay and resulting stater command a very small footprint.

Clever, Convenient Design to 25 hp

Six different base models (single- and three-phase) are available, ranging from fractional to 25 hp units (at 575V). This allows you to closely match the starter to your application.

Each starter is equipped with a telescopic base-mount for the pilot device contact blocks. This eliminates all wiring between the cover and starter base, making commissioning and troubleshooting a snap.

Additional Reference

Cover Control	**V10-T3-3**
Dimensions	**Tab 14**
Accessories and Modifications	**Tab 15**
Renewal Parts	**Tab 16**
Technical Data and Specifications	**Tab 17**

Features and Benefits

- Single- and three-phase enclosed starters to 25 hp (at 575V)
- Rugged IP65 polycarbonate enclosure equivalent to NEMA 1, 12, 13, 3R and 4X environmental protection
- All starters feature the modern ***XT*** contactor family from Eaton in your choice of control voltage from 24 Vac to 600 Vac
- Class 10 motor protection is provided by adjustable bimetal overload relays
- Standard starters feature START/STOP double pushbuttons and a RESET selected from our rugged M22 pilot device line
- Other control options include OFF–ON or HAND–0–AUTO selector switches, with or without pilot light
- All starters use electrical operators to energize and de-energize the starter, providing longer component lifespan and the option for two-wire control
- 5 hp starters are only six inches high; 25 hp starters are less than 10 inches high

Standards and Certifications

Note: See **Tab 17** for additional information on standards and certifications that apply to all enclosed control products.

- UL Listed/CSA/IEC

Product Configuration Overview

Starter sizes (mm)

- To 5 hp (at 575V): 160 x 100 x 145 (L x W x D)
- To 20 hp (at 575V): 200 x 120 x 160 (L x W x D)
- To 25 hp (at 575V): 240 x 160 x 160 (L x W x D)

Phases

- Available in single- and three-phase

Contactors

- From miniature to 32 amps

Voltages

- 50 Hz: 110V, 23V, 415V
- 60 Hz: 24V, 120V, 208V, 240V, 480V, 600V

Pilot devices

- START/STOP double-pushbutton
- ON–OFF selector switch
- HAND–0–AUTO selector switch

Illumination options

- Red light 85–264 Vac
- Red light 12–30 Vac/Vdc
- Without illumination

Catalog Number Selection

XT IEC Line Non-Metallic Enclosed Control

EC X 09 E 5 A A A - _

Design
X = ***XT*** IEC

Class	Page
09 = Non-combination non-reversing starter	**V10-T3-4**

Size	
Non-Combination Ampere Rating	
B = 7A	**F** = 18A
C = 9A	**G** = 25A
D = 12A	**H** = 32A
E = 15A	

Enclosure Type/IP Ratings ①
5 = Type 4X—Watertight (non-metallic)/IP66

Coil Voltage	
A = 120V	**H** = 277V
B = 240V	**L** = 380V/50 Hz
C = 480V	**Q** = 24 Vdc
D = 600V	**T** = 24 Vac
E = 208V	

Cover Control
See table below

Disconnect
A = None

Overload Range
See table below

XTOB Overload Relays for Enclosed *XT*

FLA Ratings	Size B–E 7–15A	Size F–H 18–32A
0.1–0.16	**A**	**A**
0.16–0.24	**B**	**B**
0.24–0.4	**C**	**C**
0.4–0.6	**D**	**D**
0.6–1	**E**	**E**
1–1.6	**F**	**F**
1.6–2.4	**G**	**G**
2.4–4	**H**	**H**

FLA Ratings	Size B–E 7–15A	Size F–H 18–32A
4–6	**I**	**I**
6–10	**J**	**J**
9–12	**K**	—
10–16	—	**L**
12–16	**L**	—
16–24	—	**M**
24–32	—	**N**

XTOE Electronic Overload Relays for Enclosed *XT*

FLA Ratings	Size B–E 7–15A	Size F–H 18–32A
0.33–1.65	**R63/A**	**R63/A**
1–5	**R63/B**	**R63/B**
4–20	**R63/C**	**R63/C**
9–45	—	**R63/D**

Cover Control Options

B **C** **H** **J** **S** **T**

Cover Control Options

Description	Position 9 Control Code
No cover mounted pilot devices	**A**
START/STOP pushbuttons	**B**
With red RUN pilot light	**C**
HAND/OFF/AUTO selector switch	**H**
With red RUN pilot light	**J**
ON/OFF selector switch	**S**
With red RUN pilot light	**T**

Note

① See **Tab 1** for enclosure type/IP rating cross-reference.

Product Selection

CI-K Basic Enclosures

CI-K Basic Enclosures ①②

Dimensions in Inches (mm)

Width	Height	External Depth	Internal Depth	Internal Mounting Type	Pkg. Qty.	Catalog Number
3.94 (100.0)	6.30 (160.0)	3.94 (100.0)	2.87 (73.0)	With mounting rail	1	**CI-K2X-100-TS-NA** ③
			3.11 (79.0)	With mounting plate		**CI-K2X-100-M-NA** ③
		5.71 (145.0)	4.65 (118.0)	With mounting rail		**CI-K2X-145-TS-NA** ③
			4.88 (124.0)	With mounting plate		**CI-K2X-145-M-NA** ③
4.72 (120.0)	7.87 (200.0)	4.92 (125.0)	3.66 (93.0)	With mounting rail	1	**CI-K3X-125-TS-NA** ④
			3.86 (98.0)	With mounting plate		**CI-K3X-125-M-NA** ④
		6.30 (160.0)	5.04 (128.0)	With mounting rail		**CI-K3X-160-TS-NA** ④
			5.24 (133.0)	With mounting plate		**CI-K3X-160-M-NA** ④
6.30 (160.0)	9.45 (240.0)	6.30 (160.0)	5.04 (128.0)	With mounting rail	1	**CI-K4X-160-TS-NA** ④
			5.24 (133.0)	With mounting plate		**CI-K4X-160-M-NA** ④
7.87 (200.0)	11.02 (280.0)	6.30 (160.0)	5.04 (128.0)	With mounting rail	1	**CI-K5X-160-TS-NA** ④
			5.24 (133.0)	With mounting plate		**CI-K5X-160-M-NA** ④

Class ECX09—Non-Metallic Non-Combination Non-Reversing Contactor ONLY

Amps	Maximum hp ⑤ Motor Voltage ⑥	Single-Phase	Three-Phase	Coil Voltage at 60 Hz ⑦	Type 4X/IP66 Catalog Number	Component Catalog Number
Size B						
7	115	1/4	—	120	**ECX09B5AAA**	**XTCE007B10A**
	208	3/4	1-1/2	208	**ECX09B5EAA**	**XTCE007B10E**
	230	1	2	240	**ECX09B5BAA**	**XTCE007B10B**
	380	—	3	380/50 Hz	**ECX09B5LAA**	**XTCE007B10L**
	460	—	3	480	**ECX09B5CAA**	**XTCE007B10C**
	575	—	5	600	**ECX09B5DAA**	**XTCE007B10D**
Size C						
9	115	1/2	—	120	**ECX09C5AAA**	**XTCE009B10A**
	208	1	2	208	**ECX09C5EAA**	**XTCE009B10E**
	230	1-1/2	3	240	**ECX09C5BAA**	**XTCE009B10B**
	380	—	5	380/50 Hz	**ECX09C5LAA**	**XTCE009B10L**
	460	—	5	480	**ECX09C5CAA**	**XTCE009B10C**
	575	—	7-1/2	600	**ECX09C5DAA**	**XTCE009B10D**
Size D						
12	115	1/2	—	120	**ECX09D5AAA**	**XTCE012B10A**
	208	1-1/2	3	208	**ECX09D5EAA**	**XTCE012B10E**
	230	2	3	240	**ECX09D5BAA**	**XTCE012B10B**
	380	—	5	380/50 Hz	**ECX09D5LAA**	**XTCE012B10L**
	460	—	7-1/2	480	**ECX09D5CAA**	**XTCE012B10C**
	575	—	10	600	**ECX09D5DAA**	**XTCE012B10D**
Size E						
15	115	3/4	—	120	**ECX09E5AAA**	**XTCE015B10A**
	208	2	3	208	**ECX09E5EAA**	**XTCE015B10E**
	230	2	3	240	**ECX09E5BAA**	**XTCE015B10B**
	380	—	5	380/50 Hz	**ECX09E5LAA**	**XTCE015B10L**
	460	—	7-1/2	480	**ECX09E5CAA**	**XTCE015B10C**
	575	—	10	600	**ECX09E5DAA**	**XTCE015B10D**

Notes

① Enclosure base RAL 9005, black/enclosure top only RAL 7035. light gray.
② Degree of protection—IEC: IP65; UL/CSA: Type 1, 3R, 4X, 12, 13—indoor and outdoor use.
③ CI-K2X_: 4 x 1/2 inch knockouts.
④ CI-K3X_, CI-K4X_, CI-K5X_: Smooth overall with sharp corners.
⑤ 1 hp = 0.746 kW.
⑥ Contact factory for other voltage options.
⑦ Voltage is listed at 60 Hz unless otherwise noted. Other voltages available upon request.

Class ECX09—Non-Metallic Non-Combination Non-Reversing Contactor ONLY, continued

Amps	Maximum hp ① Motor Voltage ②	Single-Phase	Three-Phase	Coil Voltage at 60 Hz ③	Type 4X/IP66 Catalog Number	Component Catalog Number
Size F						
18	115	2	—	120	**ECX09F5AAA**	**XTCE018C10A**
	208	2	5	208	**ECX09F5EAA**	**XTCE018C10E**
	230	3	5	240	**ECX09F5BAA**	**XTCE018C10B**
	380	—	7-1/2	380/50 Hz	**ECX09F5LAA**	**XTCE018C10L**
	460	—	10	480	**ECX09F5CAA**	**XTCE018C10C**
	575	—	15	600	**ECX09F5DAA**	**XTCE018C10D**
Size G						
25	115	2	—	120	**ECX09G5AAA**	**XTCE025C10A**
	208	3	7-1/2	208	**ECX09G5EAA**	**XTCE025C10E**
	230	5	7-1/2	240	**ECX09G5BAA**	**XTCE025C10B**
	380	—	10	380/50 Hz	**ECX09G5LAA**	**XTCE025C10L**
	460	—	15	480	**ECX09G5CAA**	**XTCE025C10C**
	575	—	20	600	**ECX09G5DAA**	**XTCE025C10D**
Size H						
32	115	3	—	120	**ECX09H5AAA**	**XTCE032C10A**
	208	5	10	208	**ECX09H5EAA**	**XTCE032C10E**
	230	5	10	240	**ECX09H5BAA**	**XTCE032C10B**
	380	—	15	380/50 Hz	**ECX09H5LAA**	**XTCE032C10L**
	460	—	20	480	**ECX09H5CAA**	**XTCE032C10C**
	575	—	25	600	**ECX09H5DAA**	**XTCE032C10D**

Notes

① 1 hp = 0.746 kW.

② Contact factory for other voltage options.

③ Voltage is listed at 60 Hz unless otherwise noted. Other voltages available upon request.

Class ECX09—Non-Metallic Non-Combination Non-Reversing Starter

Amps	Maximum hp ① Motor Voltage ②	Single-Phase	Three-Phase	Coil Voltage at 60 Hz ③	Type 4X/IP66 Catalog Number ④	Component Catalog Number ⑤
Size B						
7	115	1/4	—	120	**ECX09B5AAA-_**	**XTAE007B10A_**
	208	3/4	1-1/2	208	**ECX09B5EAA-_**	**XTAE007B10E_**
	230	1	2	240	**ECX09B5BAA-_**	**XTAE007B10B_**
	380	—	3	380/50 Hz	**ECX09B5LAA-_**	**XTAE007B10L_**
	460	—	3	480	**ECX09B5CAA-_**	**XTAE007B10C_**
	575	—	5	600	**ECX09B5DAA-_**	**XTAE007B10D_**
Size C						
9	115	1/2	—	120	**ECX09C5AAA-_**	**XTAE009B10A_**
	208	1	2	208	**ECX09C5EAA-_**	**XTAE009B10E_**
	230	1-1/2	3	240	**ECX09C5BAA-_**	**XTAE009B10B_**
	380	—	5	380/50 Hz	**ECX09C5LAA-_**	**XTAE009B10L_**
	460	—	5	480	**ECX09C5CAA-_**	**XTAE009B10C_**
	575	—	7-1/2	600	**ECX09C5DAA-_**	**XTAE009B10D_**
Size D						
12	115	1/2	—	120	**ECX09D5AAA-_**	**XTAE012B10A_**
	208	1-1/2	3	208	**ECX09D5EAA-_**	**XTAE012B10E_**
	230	2	3	240	**ECX09D5BAA-_**	**XTAE012B10B_**
	380	—	5	380/50 Hz	**ECX09D5LAA-_**	**XTAE012B10L_**
	460	—	7-1/2	480	**ECX09D5CAA-_**	**XTAE012B10C_**
	575	—	10	600	**ECX09D5DAA-_**	**XTAE012B10D_**
Size E						
15	115	3/4	—	120	**ECX09E5AAA-_**	**XTAE015B10A_**
	208	2	3	208	**ECX09E5EAA-_**	**XTAE015B10E_**
	230	2	3	240	**ECX09E5BAA-_**	**XTAE015B10B_**
	380	—	5	380/50 Hz	**ECX09E5LAA-_**	**XTAE015B10L_**
	460	—	7-1/2	480	**ECX09E5CAA-_**	**XTAE015B10C_**
	575	—	10	600	**ECX09E5DAA-_**	**XTAE015B10D_**

Notes

① 1 hp = 0.746 kW.

② Contact factory for other voltage options.

③ Voltage is listed at 60 Hz unless otherwise noted. Other voltages available upon request.

④ Select proper "XTOB" or "XTOE" overload amperage range as per motor FLA, see **Page V10-T3-3**.

⑤ For complete component Catalog Number, see **Volume 5—Motor Control and Protection, CA08100005E, Tab 27**.

Class ECX09—Non-Metallic Non-Combination Non-Reversing Starter, continued

Amps	Maximum hp ① Motor Voltage ②	Single-Phase	Three-Phase	Coil Voltage at 60 Hz ③	Type 4X/IP66 Catalog Number ④	Component Catalog Number ⑤
Size F						
18	115	2	—	120	**ECX09F5AAA-_**	**XTAE018C10A_**
	208	2	5	208	**ECX09F5EAA-_**	**XTAE018C10E_**
	230	3	5	240	**ECX09F5BAA-_**	**XTAE018C10B_**
	380	—	7-1/2	380/50 Hz	**ECX09F5LAA-_**	**XTAE018C10L_**
	460	—	10	480	**ECX09F5CAA-_**	**XTAE018C10C_**
	575	—	15	600	**ECX09F5DAA-_**	**XTAE018C10D_**
Size G						
25	115	2	—	120	**ECX09G5AAA-_**	**XTAE025C10A_**
	208	3	7-1/2	208	**ECX09G5EAA-_**	**XTAE025C10E_**
	230	5	7-1/2	240	**ECX09G5BAA-_**	**XTAE025C10B_**
	380	—	10	380/50 Hz	**ECX09G5LAA-_**	**XTAE025C10L_**
	460	—	15	480	**ECX09G5CAA-_**	**XTAE025C10C_**
	575	—	20	600	**ECX09G5DAA-_**	**XTAE025C10D_**
Size H						
32	115	3	—	120	**ECX09H5AAA-_**	**XTAE032C10A_**
	208	5	10	208	**ECX09H5EAA-_**	**XTAE032C10E_**
	230	5	10	240	**ECX09H5BAA-_**	**XTAE032C10B_**
	380	—	15	380/50 Hz	**ECX09H5LAA-_**	**XTAE032C10L_**
	460	—	20	480	**ECX09H5CAA-_**	**XTAE032C10C_**
	575	—	25	600	**ECX09H5DAA-_**	**XTAE032C10D_**

Notes

① 1 hp = 0.746 kW.
② Contact factory for other voltage options.
③ Voltage is listed at 60 Hz unless otherwise noted. Other voltages available upon request.
④ Select proper "XTOB" or "XTOE" overload amperage range as per motor FLA, see **Page V10-T3-3**.
⑤ For complete component Catalog Number, see **Volume 5—Motor Control and Protection, CA08100005E, Tab 27**.

IEC Metallic Enclosure—Contactors and Starters

Contents

Description	*Page*
Non-Metallic Enclosure—Contactors and Starters	**V10-T3-2**
Metallic Enclosure—Contactors and Starters	
Catalog Number Selection	**V10-T3-9**
Cover Control	**V10-T3-10**
Product Selection	
Non-Combination Starters	**V10-T3-13**
Combination Starters	**V10-T3-22**
Wiring Diagrams	**V10-T3-34**
Combination Motor Controllers	**V10-T3-37**

Metallic Enclosure—Contactors and Starters

Product Description

Eaton's ***XT*** line includes iec contactors, starters and combination motor controllers (CMCs). Designed to meet international standards, the enclosed control ***XT*** line (ECX), carries UL and cUL certifications.

Features and Benefits

- AC control from 12V to 600V 50/60 Hz
- DC control from 12V to 220V
- Available with screw or spring cage terminals
- Reversing or non-reversing contactors and starters
- AC-3 contactor ratings to 1000A and AC-1 contactor ratings to 2000A
- Non-reversing starters to 650A
- Panel or DIN rail mounting to 65A
- IP20 finger and back-of-hand proof
- Large ambient temperature range, –25° to 50°C [–13° to 122°F]
- AC and DC controlled contactors in the same compact frame
- Low power consumption DC coils
- Built-in NO or NC auxiliary contacts to 32A
- Plug-in accessories for reduced installation time
- Non-metallic and metallic enclosures in Types 1 (IP23), 4 (IP66), 4X (IP66), 12 (IP65) and 3R (IP32)
- Circuit breakers, fused, non-fused and non-combination designs available
- Opaque (standard) or clear covers available on non-metallic Halyester enclosure option

Standards and Certifications

Note: See **Tab 17** for additional information on standards and certifications that apply to all enclosed control products.

- Fusible—with Class J fuses
  - UL Listed
  - cUL Listed ①
- Circuit Breaker HMCP/E
  - UL Listed
  - cUL Listed ①

Short-Circuit Ratings

- Fused, non-fused
  - 10K AIC at 600V
- HMCP
  - 0–10 hp 15K AIC at 600V
  - 15–125 hp 25K AIC at 600V
- Non-combination
  - 0–1 hp 1K AIC at 600V
  - 1.5–50 hp 5K AIC at 600V
  - 50–200 hp 10K AIC at 600V

Note

① cUL Listing indicates appropriate CSA standard investigation.

Additional Reference

Cover Control	**V10-T3-10**
Dimensions	**Tab 14**
Accessories and Modifications	**Tab 15**
Renewal Parts	**Tab 16**
Technical Data and Specifications	**Tab 17**

Catalog Number Selection

XT IEC Line Metallic Enclosed Control

EC X 25 E 5 A A A - _ _

Design
X = ***XT*** IEC

Modification Codes
See **Tab 15**

Overload Range
See table below

Class	Page
09 = Non-combination non-reversing starter	**V10-T3-13**
10 = Non-combination reversing starter	**V10-T3-16**
11 = Non-combination non-reversing starter with CPT	**V10-T3-19**
19 = Combination non-reversing starter—fusible/non-fusible disconnect	**V10-T3-22**
20 = Combination reversing starter—fusible/non-fusible disconnect	**V10-T3-25**
25 = Combination non-reversing starter—circuit breaker	**V10-T3-28**
26 = Combination reversing starter—circuit breaker	**V10-T3-31**

Disconnect Fuse Clip Ratings	
A = None	
C = 30A J	
E = 60A J	
G = 100A J	
Circuit Breaker Ratings	
A = None	**F** = 50A
B = 3A	**W** = 70A
C = 7A	**G** = 100A
D = 15A	**H** = 150A
E = 30A	**J** = 250A

Size		
Combination (Class 16–74)	**Non-Combination (Class 09–11) Ampere Rating (UL 600V)**	
IEC Size **B–Q**	**B** = 7A	**J** = 40A
	C = 9A	**K** = 50A
	D = 12A	**L** = 65A
	E = 15A	**M** = 80A
	F = 18A	**N** = 95A
	G = 25A	**P** = 115A
	H = 32A	**Q** = 150A

Enclosure Type/IP Ratings ①
1 = Type 1—General purpose/IP23
3 = Type 4—Painted steel/IP66
4 = Type 4X—Watertight (304-Grade stainless steel)/IP66
5 = Type 4X—Watertight (non-metallic)/IP66
8 = Type 12—Dust-tight/IP65

Cover Control
Type 1 non-comb. starters see **Page V10-T3-10**
All other starters see **Page V10-T3-11**

Coil Voltage	
A = 120V	**H** = 277V
B = 240V	**L** = 380V/50 Hz
C = 480V	**Q** = 24 Vdc
D = 600V	**T** = 24 Vac
E = 208V	

XTOB Overload Relays for Enclosed XT

FLA Ratings	Size B–E 7–15A	Size F–H 18–32A	Size J–L 40–65A	Size M–N 80–95A	Size P–Q 115–150A
0.1–0.16	**A**	**A**	—	—	—
0.16–0.24	**B**	**B**	—	—	—
0.24–0.4	**C**	**C**	—	—	—
0.4–0.6	**D**	**D**	—	—	—
0.6–1	**E**	**E**	—	—	—
1–1.6	**F**	**F**	—	—	—
1.6–2.4	**G**	**G**	—	—	—
2.4–4	**H**	**H**	—	—	—
4–6	**I**	**I**	—	—	—
6–10	**J**	**J**	**J**	—	—
9–12	**K**	—	—	—	—
12–16	**L** ②	**L**	**L**	—	—

FLA Ratings	Size B–E 7–15A	Size F–H 18–32A	Size J–L 40–65A	Size M–N 80–95A	Size P–Q 115–150A
16–24	—	**M**	**M**	—	—
24–32	—	**N**	—	—	—
24–40	—	—	**P**	—	—
25–35	—	—	—	**S**	**S**
35–50	—	—	—	**T**	**T**
40–57	—	—	**Q**	—	—
50–65	—	—	**R**	—	—
50–70	—	—	—	**U**	**U**
70–100	—	—	—	**V**	**V**
95–125	—	—	—	—	**W**
120–150	—	—	—	—	**X**

Notes

① See **Tab 1** for enclosure type/IP rating cross-reference.

② Size B–E is 10–16A.

Cover Control

Non-Combination Starters

Control Power Transformer (CPT) may be required.

Combination Starters

- Cover control for combination starters uses 10250T style devices as standard
- Selector switches are maintained with lever operators
- Pushbuttons are momentary type with extended pushbutton
- The kit includes hardware and connecting wires (where possible)
- For factory installed control devices other than shown below, refer to modification codes, **Tab 15**

Product Selection

Type 1 Cover Control

Type 1 Non-Combination Cover Control

Description	Factory Installed Flange Control ① Position 9 Cover Control Code	Field Installation Kits Catalog Number
Non-Reversing		
No cover mounted pilot devices	**A**	**C400GK0**
START/STOP pushbuttons	**B**	**C400GK1**
With red RUN pilot light	**C**	**C400GK12** ②
With red RUN/green OFF lights	**D**	**C400GK16** ②
HAND/OFF/AUTO selector switch	**H**	**C400GK3**
With red RUN pilot light	**J**	**C400GK32** ②
With red RUN/green OFF lights	**K**	**C400GK36** ②
Red RUN pilot light	**P**	**C400GK42** ②
Green OFF	**Q**	**C400GK41** ②
Red RUN/green OFF pilot lights	**R**	**C400GK46** ②
Reversing		
No cover mounted pilot devices	**A**	**C400GK0**
FOR/REV/STOP pushbuttons	**B**	**C400GR1**
With two red pilot lights	**C**	**C400GR14** ②
UP/STOP/DOWN pushbuttons	**E**	**C400GR2**
With two red pilot lights	**F**	**C400GR24** ②
Two red pilot lights	**P**	**C400GK44** ②
One green pilot light	**Q**	**C400GK41** ②

Notes

① For more available factory installed flange control, see **Page V10-T3-11**.

② Add code letter from the table below to catalog number for voltage—kits only. Example: C40GK0**B**.

Rating	Code Letter	Rating	Code Letter	Rating	Code Letter
120V 60 Hz	**A**	277V 60 Hz	**H**	480V 60 Hz	**C**
208V 60 Hz	**E**	380V 50 Hz	**L**	600V 60 Hz	**D**
240V 60 Hz	**B**				

10250T Cover Control Kits

Type 1 Combination and All Type 3R, 4X and 12 Cover Control ①

Description	Factory Installed Flange Control Position 9 Cover Control Code	Field Installation Kits Catalog Number
Non-Reversing		
No cover mounted pilot devices	**A**	—
START/STOP pushbuttons	**B**	**C400T1**
With red RUN pilot light	**C**	—
With red RUN/green OFF lights	**D**	—
ON/OFF pushbuttons	**E**	**C400T2**
With red RUN pilot light	**F**	—
With red RUN/green OFF lights	**G**	—
HAND/OFF/AUTO selector switch	**H**	**C400T12**
With red RUN pilot light	**J**	—
With red RUN/green OFF lights	**K**	—
START pushbutton	**L**	**C400T3**
ON pushbutton	**M**	**C400T4**
OFF pushbutton	**N**	**C400T5**
Red RUN pilot light	**P**	**C400T9** ②
Green OFF	**Q**	**C400T10** ②
Red RUN/green OFF pilot lights	**R**	**C400T11** ②
START/STOP selector switch	**S**	**C400T13**
With red RUN pilot light	**T**	—
With red RUN/green OFF lights	**U**	—
ON/OFF selector switch	**V**	**C400T14**
With red RUN pilot light	**W**	—
With red RUN/green OFF lights	**X**	—
Reversing		
No cover mounted pilot devices	**A**	—
FOR/REV/STOP pushbuttons	**B**	**C400T6**
With two red pilot lights	**C**	—
With two red/one green pilot lights	**D**	—
UP/STOP/DOWN pushbuttons	**E**	—
With two red pilot lights	**F**	—
FOR/OFF/REV selector switch	**H**	**C400T15**
With two red pilot lights	**J**	—
With two red/one green pilot lights	**K**	—
Two red pilot lights	**P**	③
One green pilot light	**Q**	**C400T10** ③
Two red/one green pilot lights	**R**	—
OPEN/OFF/CLOSE selector switch	**V**	**C400T16**
With two red pilot lights	**W**	—
With two red/one green pilot lights	**X**	—

Notes

① For Type 1 non-combination field installation kits, see **Page V10-T3-10**.

② Add code letter from the table below to catalog number for voltage—kits only. Example: C400T9**B**.

Rating	Code Letter	Rating	Code Letter	Rating	Code Letter
120V 60 Hz	**A**	277V 60 Hz	**H**	480V 60 Hz	**C**
208V 60 Hz	**E**	380V 50 Hz	**L**	600V 60 Hz	**D**
240V 60 Hz	**B**				

③ Order quantity (2) of **C400T10**.

C440 Solid-State Overload Modification

For solid-state overload enclosed control, add R63 or R64 modification code after the base Catalog Number. (Example, ECN0501AAA-**R63**/B).

Modification	IEC Size	NEMA Size	Full Load Current Adjustment Range (A)	Three-Phase without Ground Fault Auto/Manual Reset Overload Selectable Class 10/20/30	Three-Phase with Ground Fault Auto/Manual Reset Overload Selectable Class 10/20/30
Solid-state electronic overload relay ①	B and C	00	0.33–1.65 ②	**R63/A**	**R64/A**
			1–5	**R63/B**	**R64/B**
			4–20	**R63/C**	**R64/C**
	C and D	0 and 1	0.33–1.65 ②	**R63/A**	**R64/A**
			1–5	**R63/B**	**R64/B**
			4–20	**R63/C**	**R64/C**
			9–45	**R63/D**	**R64/D**
	D	2	9–45	**R63/D**	**R64/D**
	D, F and G	3	20–100	**R63/E**	**R64/E**
	G	4	28–140	**R63/F**	**R64/F**
	N/A	5	60–300	**R63/G**	**R64/G**
	N/A	6	120–600	**R63/H**	**R64/H**

Notes

① Features:
- Self-powered
- Phase loss protection
- Current adjustment knob
- ±1% repeat accuracy
- 1NO and 1NC isolated contacts

② Not UL Listed.

Product Selection

Non-Combination Starters

Class ECX09—Non-Combination Non-Reversing Starter

Amps	Maximum hp ① Motor Voltage ②	Single-Phase	Three-Phase	Coil Voltage at 60 Hz ③	Type 1/IP23 Catalog Number ④	Type 4X/IP66 ⑤ Catalog Number ④	Type 12/IP65 Catalog Number ④	Component Catalog Number ④
Size B								
7	115	1/4	—	120	**ECX09B1AAA-_**	**ECX09B4AAA-_**	**ECX09B8AAA-_**	**XTAE007B10A_**
	208	3/4	1-1/2	208	**ECX09B1EAA-_**	**ECX09B4EAA-_**	**ECX09B8EAA-_**	**XTAE007B10E_**
	230	1	2	240	**ECX09B1BAA-_**	**ECX09B4BAA-_**	**ECX09B8BAA-_**	**XTAE007B10B_**
	380	—	3	380/50 Hz	**ECX09B1LAA-_**	**ECX09B4LAA-_**	**ECX09B8LAA-_**	**XTAE007B10L_**
	460	—	3	480	**ECX09B1CAA-_**	**ECX09B4CAA-_**	**ECX09B8CAA-_**	**XTAE007B10C_**
	575	—	5	600	**ECX09B1DAA-_**	**ECX09B4DAA-_**	**ECX09B8DAA-_**	**XTAE007B10D_**
Size C								
9	115	1/2	—	120	**ECX09C1AAA-_**	**ECX09C4AAA-_**	**ECX09C8AAA-_**	**XTAE009B10A_**
	208	1	2	208	**ECX09C1EAA-_**	**ECX09C4EAA-_**	**ECX09C8EAA-_**	**XTAE009B10E_**
	230	1-1/2	3	240	**ECX09C1BAA-_**	**ECX09C4BAA-_**	**ECX09C8BAA-_**	**XTAE009B10B_**
	380	—	5	380/50 Hz	**ECX09C1LAA-_**	**ECX09C4LAA-_**	**ECX09C8LAA-_**	**XTAE009B10L_**
	460	—	5	480	**ECX09C1CAA-_**	**ECX09C4CAA-_**	**ECX09C8CAA-_**	**XTAE009B10C_**
	575	—	7-1/2	600	**ECX09C1DAA-_**	**ECX09C4DAA-_**	**ECX09C8DAA-_**	**XTAE009B10D_**
Size D								
12	115	1/2	—	120	**ECX09D1AAA-_**	**ECX09D4AAA-_**	**ECX09D8AAA-_**	**XTAE012B10A_**
	208	1-1/2	3	208	**ECX09D1EAA-_**	**ECX09D4EAA-_**	**ECX09D8EAA-_**	**XTAE012B10E_**
	230	2	3	240	**ECX09D1BAA-_**	**ECX09D4BAA-_**	**ECX09D8BAA-_**	**XTAE012B10B_**
	380	—	5	380/50 Hz	**ECX09D1LAA-_**	**ECX09D4LAA-_**	**ECX09D8LAA-_**	**XTAE012B10L_**
	460	—	7-1/2	480	**ECX09D1CAA-_**	**ECX09D4CAA-_**	**ECX09D8CAA-_**	**XTAE012B10C_**
	575	—	10	600	**ECX09D1DAA-_**	**ECX09D4DAA-_**	**ECX09D8DAA-_**	**XTAE012B10D_**
Size E								
15	115	3/4	—	120	**ECX09E1AAA-_**	**ECX09E4AAA-_**	**ECX09E8AAA-_**	**XTAE015B10A_**
	208	2	3	208	**ECX09E1EAA-_**	**ECX09E4EAA-_**	**ECX09E8EAA-_**	**XTAE015B10E_**
	230	2	3	240	**ECX09E1BAA-_**	**ECX09E4BAA-_**	**ECX09E8BAA-_**	**XTAE015B10B_**
	380	—	5	380/50 Hz	**ECX09E1LAA-_**	**ECX09E4LAA-_**	**ECX09E8LAA-_**	**XTAE015B10L_**
	460	—	7-1/2	480	**ECX09E1CAA-_**	**ECX09E4CAA-_**	**ECX09E8CAA-_**	**XTAE015B10C_**
	575	—	10	600	**ECX09E1DAA-_**	**ECX09E4DAA-_**	**ECX09E8DAA-_**	**XTAE015B10D_**
Size F								
18	115	2	—	120	**ECX09F1AAA-_**	**ECX09F4AAA-_**	**ECX09F8AAA-_**	**XTAE018C10A_**
	208	2	5	208	**ECX09F1EAA-_**	**ECX09F4EAA-_**	**ECX09F8EAA-_**	**XTAE018C10E_**
	230	3	5	240	**ECX09F1BAA-_**	**ECX09F4BAA-_**	**ECX09F8BAA-_**	**XTAE018C10B_**
	380	—	7-1/2	380/50 Hz	**ECX09F1LAA-_**	**ECX09F4LAA-_**	**ECX09F8LAA-_**	**XTAE018C10L_**
	460	—	10	480	**ECX09F1CAA-_**	**ECX09F4CAA-_**	**ECX09F8CAA-_**	**XTAE018C10C_**
	575	—	15	600	**ECX09F1DAA-_**	**ECX09F4DAA-_**	**ECX09F8DAA-_**	**XTAE018C10D_**

Notes

① 1 hp = 0.746 kW.

② Contact factory for other voltage options.

③ Voltage is listed at 60 Hz unless otherwise noted. Other voltages available upon request.

④ Select proper "XTOB" overload amperage range as per motor FLA, see **Page V10-T3-9**.

⑤ The catalog numbers listed in the Type 4X column are for Type 4X 304-Grade stainless steel, as indicated by the **seventh** digit.
Example: ECX09B**4**AAA-_. To order Type 4X 316-Grade stainless steel, change that digit to **9**. To order Type 4 painted steel, change that digit to **3**.
To order non-metallic, change that digit to **5**. For details on these alternate enclosures, see **Tab 13**.

Class ECX09—Non-Combination Non-Reversing Starter, continued

Amps	Maximum hp ① Motor Voltage ②	Single-Phase	Three-Phase	Coil Voltage at 60 Hz ③	Type 1/IP23 Catalog Number ④	Type 4X/IP66 ⑤ Catalog Number ④	Type 12/IP65 Catalog Number ④	Component Catalog Number ④
Size G								
25	115	2	—	120	**ECX09G1AAA-_**	**ECX09G4AAA-_**	**ECX09G8AAA-_**	**XTAE025C10A_**
	208	3	7-1/2	208	**ECX09G1EAA-_**	**ECX09G4EAA-_**	**ECX09G8EAA-_**	**XTAE025C10E_**
	230	5	7-1/2	240	**ECX09G1BAA-_**	**ECX09G4BAA-_**	**ECX09G8BAA-_**	**XTAE025C10B_**
	380	—	10	380/50 Hz	**ECX09G1LAA-_**	**ECX09G4LAA-_**	**ECX09G8LAA-_**	**XTAE025C10L_**
	460	—	15	480	**ECX09G1CAA-_**	**ECX09G4CAA-_**	**ECX09G8CAA-_**	**XTAE025C10C_**
	575	—	20	600	**ECX09G1DAA-_**	**ECX09G4DAA-_**	**ECX09G8DAA-_**	**XTAE025C10D_**
Size H								
32	115	3	—	120	**ECX09H1AAA-_**	**ECX09H4AAA-_**	**ECX09H8AAA-_**	**XTAE032C10A_**
	208	5	10	208	**ECX09H1EAA-_**	**ECX09H4EAA-_**	**ECX09H8EAA-_**	**XTAE032C10E_**
	230	5	10	240	**ECX09H1BAA-_**	**ECX09H4BAA-_**	**ECX09H8BAA-_**	**XTAE032C10B_**
	380	—	15	380/50 Hz	**ECX09H1LAA-_**	**ECX09H4LAA-_**	**ECX09H8LAA-_**	**XTAE032C10L_**
	460	—	20	480	**ECX09H1CAA-_**	**ECX09H4CAA-_**	**ECX09H8CAA-_**	**XTAE032C10C_**
	575	—	25	600	**ECX09H1DAA-_**	**ECX09H4DAA-_**	**ECX09H8DAA-_**	**XTAE032C10D_**
Size J								
40	115	3	—	120	**ECX09J1AAA-_**	**ECX09J4AAA-_**	**ECX09J8AAA-_**	**XTAE040D00A_**
	208	5	10	208	**ECX09J1EAA-_**	**ECX09J4EAA-_**	**ECX09J8EAA-_**	**XTAE040D00E_**
	230	7-1/2	15	240	**ECX09J1BAA-_**	**ECX09J4BAA-_**	**ECX09J8BAA-_**	**XTAE040D00D_**
	380	—	15	380/50 Hz	**ECX09J1LAA-_**	**ECX09J4LAA-_**	**ECX09J8LAA-_**	**XTAE040D00L_**
	460	—	30	480	**ECX09J1CAA-_**	**ECX09J4CAA-_**	**ECX09J8CAA-_**	**XTAE040D00C_**
	575	—	40	600	**ECX09J1DAA-_**	**ECX09J4DAA-_**	**ECX09J8DAA-_**	**XTAE040D00D_**
Size K								
50	115	3	—	120	**ECX09K1AAA-_**	**ECX09K4AAA-_**	**ECX09K8AAA-_**	**XTAE050D00A_**
	208	7-1/2	15	208	**ECX09K1EAA-_**	**ECX09K4EAA-_**	**ECX09K8EAA-_**	**XTAE050D00E_**
	230	10	20	240	**ECX09K1BAA-_**	**ECX09K4BAA-_**	**ECX09K8BAA-_**	**XTAE050D00B_**
	380	—	20	380/50 Hz	**ECX09K1LAA-_**	**ECX09K4LAA-_**	**ECX09K8LAA-_**	**XTAE050D00L_**
	460	—	40	480	**ECX09K1CAA-_**	**ECX09K4CAA-_**	**ECX09K8CAA-_**	**XTAE050D00C_**
	575	—	50	600	**ECX09K1DAA-_**	**ECX09K4DAA-_**	**ECX09K8DAA-_**	**XTAE050D00D_**
Size L								
65	115	5	—	120	**ECX09L1AAA-_**	**ECX09L4AAA-_**	**ECX09L8AAA-_**	**XTAE065D00A_**
	208	10	20	208	**ECX09L1EAA-_**	**ECX09L4EAA-_**	**ECX09L8EAA-_**	**XTAE065D00E_**
	230	15	25	240	**ECX09L1BAA-_**	**ECX09L4BAA-_**	**ECX09L8BAA-_**	**XTAE065D00B_**
	380	—	30	380/50 Hz	**ECX09L1LAA-_**	**ECX09L4LAA-_**	**ECX09L8LAA-_**	**XTAE065D00L_**
	460	—	50	480	**ECX09L1CAA-_**	**ECX09L4CAA-_**	**ECX09L8CAA-_**	**XTAE065D00C_**
	575	—	60	600	**ECX09L1DAA-_**	**ECX09L4DAA-_**	**ECX09L8DAA-_**	**XTAE065D00D_**

Notes

① 1 hp = 0.746 kW.

② Contact factory for other voltage options.

③ Voltage is listed at 60 Hz unless otherwise noted. Other voltages available upon request.

④ Select proper "XTOB" overload amperage range as per motor FLA, see **Page V10-T3-9**.

⑤ The catalog numbers listed in the Type 4X column are for Type 4X 304-Grade stainless steel, as indicated by the **seventh** digit.
Example: ECX09G**4**AAA-_. To order Type 4X 316-Grade stainless steel, change that digit to **9**. To order Type 4 painted steel, change that digit to **3**.
To order non-metallic, change that digit to **5**. For details on these alternate enclosures, see **Tab 13**.

Class ECX09—Non-Combination Non-Reversing Starter, continued

Amps	Maximum hp ① Motor Voltage ②	Single-Phase	Three-Phase	Coil Voltage at 60 Hz ③	Type 1/IP23 Catalog Number ④	Type 4X/IP66 ⑤ Catalog Number ④	Type 12/IP65 Catalog Number ④	Component Catalog Number ④
Size M								
80	115	7-1/2	—	120	**ECX09M1AAA-_**	**ECX09M4AAA-_**	**ECX09M8AAA-_**	**XTAE080F00A_**
	208	15	25	208	**ECX09M1EAA-_**	**ECX09M4EAA-_**	**ECX09M8EAA-_**	**XTAE080F00E_**
	230	15	30	240	**ECX09M1BAA-_**	**ECX09M4BAA-_**	**ECX09M8BAA-_**	**XTAE080F00B_**
	380	—	50	380/50 Hz	**ECX09M1LAA-_**	**ECX09M4LAA-_**	**ECX09M8LAA-_**	**XTAE080F00L_**
	460	—	60	480	**ECX09M1CAA-_**	**ECX09M4CAA-_**	**ECX09M8CAA-_**	**XTAE080F00C_**
	575	—	75	600	**ECX09M1DAA-_**	**ECX09M4DAA-_**	**ECX09M8DAA-_**	**XTAE080F00D_**
Size N								
95	115	7-1/2	—	120	**ECX09N1AAA-_**	**ECX09N4AAA-_**	**ECX09N8AAA-_**	**XTAE095F00A_**
	208	15	25	208	**ECX09N1EAA-_**	**ECX09N4EAA-_**	**ECX09N8EAA-_**	**XTAE095F00E_**
	230	15	40	240	**ECX09N1BAA-_**	**ECX09N4BAA-_**	**ECX09N8BAA-_**	**XTAE095F00B_**
	380	—	60	380/50 Hz	**ECX09N1LAA-_**	**ECX09N4LAA-_**	**ECX09N8LAA-_**	**XTAE095F00L_**
	460	—	75	480	**ECX09N1CAA-_**	**ECX09N4CAA-_**	**ECX09N8CAA-_**	**XTAE095F00C_**
	575	—	100	600	**ECX09N1DAA-_**	**ECX09N4DAA-_**	**ECX09N8DAA-_**	**XTAE095F00D_**
Size P								
115	115	10	—	120	**ECX09P1AAA-_**	**ECX09P4AAA-_**	**ECX09P8AAA-_**	**XTAE115G00A_**
	208	25	40	208	**ECX09P1EAA-_**	**ECX09P4EAA-_**	**ECX09P8EAA-_**	**XTAE115G00E_**
	230	25	50	240	**ECX09P1BAA-_**	**ECX09P4BAA-_**	**ECX09P8BAA-_**	**XTAE115G00B_**
	380	—	60	380/50 Hz	**ECX09P1LAA-_**	**ECX09P4LAA-_**	**ECX09P8LAA-_**	**XTAE115G00L_**
	460	—	100	480	**ECX09P1CAA-_**	**ECX09P4CAA-_**	**ECX09P8CAA-_**	**XTAE115G00C_**
	575	—	125	600	**ECX09P1DAA-_**	**ECX09P4DAA-_**	**ECX09P8DAA-_**	**XTAE115G00D_**
Size Q								
150	115	15	—	120	**ECX09Q1AAA-_**	**ECX09Q4AAA-_**	**ECX09Q8AAA-_**	**XTAE150G00A_**
	208	25	40	208	**ECX09Q1EAA-_**	**ECX09Q4EAA-_**	**ECX09Q8EAA-_**	**XTAE150G00E_**
	230	30	60	240	**ECX09Q1BAA-_**	**ECX09Q4BAA-_**	**ECX09Q8BAA-_**	**XTAE150G00B_**
	380	—	60	380/50 Hz	**ECX09Q1LAA-_**	**ECX09Q4LAA-_**	**ECX09Q8LAA-_**	**XTAE150G00L_**
	460	—	125	480	**ECX09Q1CAA-_**	**ECX09Q4CAA-_**	**ECX09Q8CAA-_**	**XTAE150G00C_**
	575	—	150	600	**ECX09Q1DAA-_**	**ECX09Q4DAA-_**	**ECX09Q8DAA-_**	**XTAE150G00D_**

Notes

① 1 hp = 0.746 kW.

② Contact factory for other voltage options.

③ Voltage is listed at 60 Hz unless otherwise noted. Other voltages available upon request.

④ Select proper "XTOB" overload amperage range as per motor FLA, see **Page V10-T3-9**.

⑤ The catalog numbers listed in the Type 4X column are for Type 4X 304-Grade stainless steel, as indicated by the **seventh** digit.
Example: ECX09M**4**AAA-_. To order Type 4X 316-Grade stainless steel, change that digit to **9**. To order Type 4 painted steel, change that digit to **3**.
To order non-metallic, change that digit to **5**. For details on these alternate enclosures, see **Tab 13**.

Class ECX10—Non-Combination Reversing Starter

Amps	Maximum hp ① Motor Voltage ②	Single-Phase	Three-Phase	Coil Voltage at 60 Hz ③	Type 1/IP23 Catalog Number ④	Type 4X/IP66 ⑤ Catalog Number ④	Type 12/IP65 Catalog Number ④	Component Catalog Number ④
Size B								
7	115	1/4	—	120	**ECX10B1AAA-_**	**ECX10B4AAA-_**	**ECX10B8AAA-_**	**XTAR007B10A_**
	208	3/4	1-1/2	208	**ECX10B1EAA-_**	**ECX10B4EAA-_**	**ECX10B8EAA-_**	**XTAR007B10E_**
	230	1	2	240	**ECX10B1BAA-_**	**ECX10B4BAA-_**	**ECX10B8BAA-_**	**XTAR007B10B_**
	380	—	3	380/50 Hz	**ECX10B1LAA-_**	**ECX10B4LAA-_**	**ECX10B8LAA-_**	**XTAR007B10L_**
	460	—	3	480	**ECX10B1CAA-_**	**ECX10B4CAA-_**	**ECX10B8CAA-_**	**XTAR007B10C_**
	575	—	5	600	**ECX10B1DAA-_**	**ECX10B4DAA-_**	**ECX10B8DAA-_**	**XTAR007B10D_**
Size C								
9	115	1/2	—	120	**ECX10C1AAA-_**	**ECX10C4AAA-_**	**ECX10C8AAA-_**	**XTAR009B10A_**
	208	1	2	208	**ECX10C1EAA-_**	**ECX10C4EAA-_**	**ECX10C8EAA-_**	**XTAR009B10E_**
	230	1-1/2	3	240	**ECX10C1BAA-_**	**ECX10C4BAA-_**	**ECX10C8BAA-_**	**XTAR009B10B_**
	380	—	5	380/50 Hz	**ECX10C1LAA-_**	**ECX10C4LAA-_**	**ECX10C8LAA-_**	**XTAR009B10L_**
	460	—	5	480	**ECX10C1CAA-_**	**ECX10C4CAA-_**	**ECX10C8CAA-_**	**XTAR009B10C_**
	575	—	7-1/2	600	**ECX10C1DAA-_**	**ECX10C4DAA-_**	**ECX10C8DAA-_**	**XTAR009B10D_**
Size D								
12	115	1/2	—	120	**ECX10D1AAA-_**	**ECX10D4AAA-_**	**ECX10D8AAA-_**	**XTAR012B10A_**
	208	1-1/2	3	208	**ECX10D1EAA-_**	**ECX10D4EAA-_**	**ECX10D8EAA-_**	**XTAR012B10E_**
	230	2	3	240	**ECX10D1BAA-_**	**ECX10D4BAA-_**	**ECX10D8BAA-_**	**XTAR012B10B_**
	380	—	5	380/50 Hz	**ECX10D1LAA-_**	**ECX10D4LAA-_**	**ECX10D8LAA-_**	**XTAR012B10L_**
	460	—	7-1/2	480	**ECX10D1CAA-_**	**ECX10D4CAA-_**	**ECX10D8CAA-_**	**XTAR012B10C_**
	575	—	10	600	**ECX10D1DAA-_**	**ECX10D4DAA-_**	**ECX10D8DAA-_**	**XTAR012B10D_**
Size E								
15	115	3/4	—	120	**ECX10E1AAA-_**	**ECX10E4AAA-_**	**ECX10E8AAA-_**	**XTAR015B10A_**
	208	2	3	208	**ECX10E1EAA-_**	**ECX10E4EAA-_**	**ECX10E8EAA-_**	**XTAR015B10E_**
	230	2	3	240	**ECX10E1BAA-_**	**ECX10E4BAA-_**	**ECX10E8BAA-_**	**XTAR015B10B_**
	380	—	5	380/50 Hz	**ECX10E1LAA-_**	**ECX10E4LAA-_**	**ECX10E8LAA-_**	**XTAR015B10L_**
	460	—	7-1/2	480	**ECX10E1CAA-_**	**ECX10E4CAA-_**	**ECX10E8CAA-_**	**XTAR015B10C_**
	575	—	10	600	**ECX10E1DAA-_**	**ECX10E4DAA-_**	**ECX10E8DAA-_**	**XTAR015B10D_**
Size F								
18	115	2	—	120	**ECX10F1AAA-_**	**ECX10F4AAA-_**	**ECX10F8AAA-_**	**XTAR018C10A_**
	208	2	5	208	**ECX10F1EAA-_**	**ECX10F4EAA-_**	**ECX10F8EAA-_**	**XTAR018C10E_**
	230	3	5	240	**ECX10F1BAA-_**	**ECX10F4BAA-_**	**ECX10F8BAA-_**	**XTAR018C10B_**
	380	—	7-1/2	380/50 Hz	**ECX10F1LAA-_**	**ECX10F4LAA-_**	**ECX10F8LAA-_**	**XTAR018C10L_**
	460	—	10	480	**ECX10F1CAA-_**	**ECX10F4CAA-_**	**ECX10F8CAA-_**	**XTAR018C10C_**
	575	—	15	600	**ECX10F1DAA-_**	**ECX10F4DAA-_**	**ECX10F8DAA-_**	**XTAR018C10D_**

Notes

① 1 hp = 0.746 kW.

② Contact factory for other voltage options.

③ Voltage is listed at 60 Hz unless otherwise noted. Other voltages available upon request.

④ Select proper "XTOB" overload amperage range as per motor FLA, see **Page V10-T3-9**.

⑤ The catalog numbers listed in the Type 4X column are for Type 4X 304-Grade stainless steel, as indicated by the **seventh** digit.
Example: ECX10B**4**AAA-_. To order Type 4X 316-Grade stainless steel, change that digit to **9**. To order Type 4 painted steel, change that digit to **3**.
To order non-metallic, change that digit to **5**. For details on these alternate enclosures, see **Tab 13**.

Class ECX10—Non-Combination Reversing Starter, continued

Amps	Maximum hp ① Motor Voltage ②	Single-Phase	Three-Phase	Coil Voltage at 60 Hz ③	Type 1/IP23 Catalog Number ④	Type 4X/IP66 ⑤ Catalog Number ④	Type 12/IP65 Catalog Number ④	Component Catalog Number ④
Size G								
25	115	2	—	120	**ECX10G1AAA-_**	**ECX10G4AAA-_**	**ECX10G8AAA-_**	**XTAR025C10A_**
	208	3	7-1/2	208	**ECX10G1EAA-_**	**ECX10G4EAA-_**	**ECX10G8EAA-_**	**XTAR025C10E_**
	230	5	7-1/2	240	**ECX10G1BAA-_**	**ECX10G4BAA-_**	**ECX10G8BAA-_**	**XTAR025C10B_**
	380	—	10	380/50 Hz	**ECX10G1LAA-_**	**ECX10G4LAA-_**	**ECX10G8LAA-_**	**XTAR025C10L_**
	460	—	15	480	**ECX10G1CAA-_**	**ECX10G4CAA-_**	**ECX10G8CAA-_**	**XTAR025C10C_**
	575	—	20	600	**ECX10G1DAA-_**	**ECX10G4DAA-_**	**ECX10G8DAA-_**	**XTAR025C10D_**
Size H								
32	115	3	—	120	**ECX10H1AAA-_**	**ECX10H4AAA-_**	**ECX10H8AAA-_**	**XTAR032C10A_**
	208	5	10	208	**ECX10H1EAA-_**	**ECX10H4EAA-_**	**ECX10H8EAA-_**	**XTAR032C10E_**
	230	5	10	240	**ECX10H1BAA-_**	**ECX10H4BAA-_**	**ECX10H8BAA-_**	**XTAR032C10B_**
	380	—	15	380/50 Hz	**ECX10H1LAA-_**	**ECX10H4LAA-_**	**ECX10H8LAA-_**	**XTAR032C10L_**
	460	—	20	480	**ECX10H1CAA-_**	**ECX10H4CAA-_**	**ECX10H8CAA-_**	**XTAR032C10C_**
	575	—	25	600	**ECX10H1DAA-_**	**ECX10H4DAA-_**	**ECX10H8DAA-_**	**XTAR032C10D_**
Size J								
40	115	3	—	120	**ECX10J1AAA-_**	**ECX10J4AAA-_**	**ECX10J8AAA-_**	**XTAR040D00A_**
	208	5	10	208	**ECX10J1EAA-_**	**ECX10J4EAA-_**	**ECX10J8EAA-_**	**XTAR040D00E_**
	230	7-1/2	15	240	**ECX10J1BAA-_**	**ECX10J4BAA-_**	**ECX10J8BAA-_**	**XTAR040D00B_**
	380	—	15	380/50 Hz	**ECX10J1LAA-_**	**ECX10J4LAA-_**	**ECX10J8LAA-_**	**XTAR040D00L_**
	460	—	30	480	**ECX10J1CAA-_**	**ECX10J4CAA-_**	**ECX10J8CAA-_**	**XTAR040D00C_**
	575	—	40	600	**ECX10J1DAA-_**	**ECX10J4DAA-_**	**ECX10J8DAA-_**	**XTAR040D00D_**
Size K								
50	115	3	—	120	**ECX10K1AAA-_**	**ECX10K4AAA-_**	**ECX10K8AAA-_**	**XTAR050D00A_**
	208	7-1/2	15	208	**ECX10K1EAA-_**	**ECX10K4EAA-_**	**ECX10K8EAA-_**	**XTAR050D00E_**
	230	10	20	240	**ECX10K1BAA-_**	**ECX10K4BAA-_**	**ECX10K8BAA-_**	**XTAR050D00B_**
	380	—	20	380/50 Hz	**ECX10K1LAA-_**	**ECX10K4LAA-_**	**ECX10K8LAA-_**	**XTAR050D00L_**
	460	—	40	480	**ECX10K1CAA-_**	**ECX10K4CAA-_**	**ECX10K8CAA-_**	**XTAR050D00C_**
	575	—	50	600	**ECX10K1DAA-_**	**ECX10K4DAA-_**	**ECX10K8DAA-_**	**XTAR050D00D_**
Size L								
65	115	5	—	120	**ECX10L1AAA-_**	**ECX10L4AAA-_**	**ECX10L8AAA-_**	**XTAR065D00A_**
	208	10	20	208	**ECX10L1EAA-_**	**ECX10L4EAA-_**	**ECX10L8EAA-_**	**XTAR065D00E_**
	230	15	25	240	**ECX10L1BAA-_**	**ECX10L4BAA-_**	**ECX10L8BAA-_**	**XTAR065D00B_**
	380	—	30	380/50 Hz	**ECX10L1LAA-_**	**ECX10L4LAA-_**	**ECX10L8LAA-_**	**XTAR065D00L_**
	460	—	50	480	**ECX10L1CAA-_**	**ECX10L4CAA-_**	**ECX10L8CAA-_**	**XTAR065D00C_**
	575	—	60	600	**ECX10L1DAA-_**	**ECX10L4DAA-_**	**ECX10L8DAA-_**	**XTAR065D00D_**

Notes

① 1 hp = 0.746 kW.

② Contact factory for other voltage options.

③ Voltage is listed at 60 Hz unless otherwise noted. Other voltages available upon request.

④ Select proper "XTOB" overload amperage range as per motor FLA, see **Page V10-T3-9**.

⑤ The catalog numbers listed in the Type 4X column are for Type 4X 304-Grade stainless steel, as indicated by the **seventh** digit.
Example: ECX10G4AAA-_. To order Type 4X 316-Grade stainless steel, change that digit to **9**. To order Type 4 painted steel, change that digit to **3**.
To order non-metallic, change that digit to **5**. For details on these alternate enclosures, see **Tab 13**.

Class ECX10—Non-Combination Reversing Starter, continued

Amps	Maximum hp ① Motor Voltage ②	Single-Phase	Three-Phase	Coil Voltage at 60 Hz ③	Type 1/IP23 Catalog Number ④	Type 4X/IP66 ⑤ Catalog Number ④	Type 12/IP65 Catalog Number ④	Component Catalog Number ④
Size M								
80	115	7-1/2	—	120	**ECX10M1AAA-_**	**ECX10M4AAA-_**	**ECX10M8AAA-_**	**XTAR080F00A_**
	208	15	25	208	**ECX10M1EAA-_**	**ECX10M4EAA-_**	**ECX10M8EAA-_**	**XTAR080F00E_**
	230	15	30	240	**ECX10M1BAA-_**	**ECX10M4BAA-_**	**ECX10M8BAA-_**	**XTAR080F00B_**
	380	—	50	380/50 Hz	**ECX10M1LAA-_**	**ECX10M4LAA-_**	**ECX10M8LAA-_**	**XTAR080F00L_**
	460	—	60	480	**ECX10M1CAA-_**	**ECX10M4CAA-_**	**ECX10M8CAA-_**	**XTAR080F00C_**
	575	—	75	600	**ECX10M1DAA-_**	**ECX10M4DAA-_**	**ECX10M8DAA-_**	**XTAR080F00D_**
Size N								
95	115	7-1/2	—	120	**ECX10N1AAA-_**	**ECX10N4AAA-_**	**ECX10N8AAA-_**	**XTAR095F00A_**
	208	15	25	208	**ECX10N1EAA-_**	**ECX10N4EAA-_**	**ECX10N8EAA-_**	**XTAR095F00E_**
	230	15	40	240	**ECX10N1BAA-_**	**ECX10N4BAA-_**	**ECX10N8BAA-_**	**XTAR095F00B_**
	380	—	60	380/50 Hz	**ECX10N1LAA-_**	**ECX10N4LAA-_**	**ECX10N8LAA-_**	**XTAR095F00L_**
	460	—	75	480	**ECX10N1CAA-_**	**ECX10N4CAA-_**	**ECX10N8CAA-_**	**XTAR095F00C_**
	575	—	100	600	**ECX10N1DAA-_**	**ECX10N4DAA-_**	**ECX10N8DAA-_**	**XTAR095F00D_**
Size P								
115	115	10	—	120	**ECX10P1AAA-_**	**ECX10P4AAA-_**	**ECX10P8AAA-_**	**XTAR115G00A_**
	208	25	40	208	**ECX10P1EAA-_**	**ECX10P4EAA-_**	**ECX10P8EAA-_**	**XTAR115G00E_**
	230	25	50	240	**ECX10P1BAA-_**	**ECX10P4BAA-_**	**ECX10P8BAA-_**	**XTAR115G00B_**
	380	—	60	380/50 Hz	**ECX10P1LAA-_**	**ECX10P4LAA-_**	**ECX10P8LAA-_**	**XTAR115G00L_**
	460	—	100	480	**ECX10P1CAA-_**	**ECX10P4CAA-_**	**ECX10P8CAA-_**	**XTAR115G00C_**
	575	—	125	600	**ECX10P1DAA-_**	**ECX10P4DAA-_**	**ECX10P8DAA-_**	**XTAR115G00D_**
Size Q								
150	115	15	—	120	**ECX10Q1AAA-_**	**ECX10Q4AAA-_**	**ECX10Q8AAA-_**	**XTAR150G00A_**
	208	25	40	208	**ECX10Q1EAA-_**	**ECX10Q4EAA-_**	**ECX10Q8EAA-_**	**XTAR150G00E_**
	230	30	60	240	**ECX10Q1BAA-_**	**ECX10Q4BAA-_**	**ECX10Q8BAA-_**	**XTAR150G00B_**
	380	—	60	380/50 Hz	**ECX10Q1LAA-_**	**ECX10Q4LAA-_**	**ECX10Q8LAA-_**	**XTAR150G00L_**
	460	—	125	480	**ECX10Q1CAA-_**	**ECX10Q4CAA-_**	**ECX10Q8CAA-_**	**XTAR150G00C_**
	575	—	150	600	**ECX10Q1DAA-_**	**ECX10Q4DAA-_**	**ECX10Q8DAA-_**	**XTAR150G00D_**

Notes

① 1 hp = 0.746 kW.

② Contact factory for other voltage options.

③ Voltage is listed at 60 Hz unless otherwise noted. Other voltages available upon request.

④ Select proper "XTOB" overload amperage range as per motor FLA, see **Page V10-T3-9**.

⑤ The catalog numbers listed in the Type 4X column are for Type 4X 304-Grade stainless steel, as indicated by the **seventh** digit.
Example: ECX10M**4**AAA-_. To order Type 4X 316-Grade stainless steel, change that digit to **9**. To order Type 4 painted steel, change that digit to **3**.
To order non-metallic, change that digit to **5**. For details on these alternate enclosures, see **Tab 13**.

Class ECX11—Non-Combination Non-Reversing Starter with CPT

Amps	Maximum hp ① Motor Voltage ②	Single-Phase	Three-Phase	Coil Voltage at 60 Hz ③	Type 1/IP23 Catalog Number ④	Type 4X/IP66 ⑤ Catalog Number ④	Type 12/IP65 Catalog Number ④	Component Catalog Number ④
Size B								
7	115	1/4	—	120	**ECX11B1AAA-_**	**ECX11B4AAA-_**	**ECX11B8AAA-_**	**XTAE007B10A_**
	208	3/4	1-1/2	120	**ECX11B1AAA-_**	**ECX11B4AAA-_**	**ECX11B8AAA-_**	**XTAE007B10A_**
	230	1	2	120	**ECX11B1AAA-_**	**ECX11B4AAA-_**	**ECX11B8AAA-_**	**XTAE007B10A_**
	380	—	3	110	**ECX11B1AAA-_**	**ECX11B4AAA-_**	**ECX11B8AAA-_**	**XTAE007B10A_**
	460	—	3	120	**ECX11B1AAA-_**	**ECX11B4AAA-_**	**ECX11B8AAA-_**	**XTAE007B10A_**
	575	—	5	120	**ECX11B1AAA-_**	**ECX11B4AAA-_**	**ECX11B8AAA-_**	**XTAE007B10A_**
Size C								
9	115	1/2	—	120	**ECX11C1AAA-_**	**ECX11C4AAA-_**	**ECX11C8AAA-_**	**XTAE009B10A_**
	208	1	2	120	**ECX11C1AAA-_**	**ECX11C4AAA-_**	**ECX11C8AAA-_**	**XTAE009B10A_**
	230	1-1/2	3	120	**ECX11C1AAA-_**	**ECX11C4AAA-_**	**ECX11C8AAA-_**	**XTAE009B10A_**
	380	—	5	110	**ECX11C1AAA-_**	**ECX11C4AAA-_**	**ECX11C8AAA-_**	**XTAE009B10A_**
	460	—	5	120	**ECX11C1AAA-_**	**ECX11C4AAA-_**	**ECX11C8AAA-_**	**XTAE009B10A_**
	575	—	7-1/2	120	**ECX11C1AAA-_**	**ECX11C4AAA-_**	**ECX11C8AAA-_**	**XTAE009B10A_**
Size D								
12	115	1/2	—	120	**ECX11D1AAA-_**	**ECX11D4AAA-_**	**ECX11D8AAA-_**	**XTAE012B10A_**
	208	1-1/2	3	120	**ECX11D1AAA-_**	**ECX11D4AAA-_**	**ECX11D8AAA-_**	**XTAE012B10A_**
	230	2	3	120	**ECX11D1AAA-_**	**ECX11D4AAA-_**	**ECX11D8AAA-_**	**XTAE012B10A_**
	380	—	5	110	**ECX11D1AAA-_**	**ECX11D4AAA-_**	**ECX11D8AAA-_**	**XTAE012B10A_**
	460	—	7-1/2	120	**ECX11D1AAA-_**	**ECX11D4AAA-_**	**ECX11D8AAA-_**	**XTAE012B10A_**
	575	—	10	120	**ECX11D1AAA-_**	**ECX11D4AAA-_**	**ECX11D8AAA-_**	**XTAE012B10A_**
Size E								
15	115	3/4	—	120	**ECX11E1AAA-_**	**ECX11E4AAA-_**	**ECX11E8AAA-_**	**XTAE015B10A_**
	208	2	3	120	**ECX11E1AAA-_**	**ECX11E4AAA-_**	**ECX11E8AAA-_**	**XTAE015B10A_**
	230	2	3	120	**ECX11E1AAA-_**	**ECX11E4AAA-_**	**ECX11E8AAA-_**	**XTAE015B10A_**
	380	—	5	110	**ECX11E1AAA-_**	**ECX11E4AAA-_**	**ECX11E8AAA-_**	**XTAE015B10A_**
	460	—	7-1/2	120	**ECX11E1AAA-_**	**ECX11E4AAA-_**	**ECX11E8AAA-_**	**XTAE015B10A_**
	575	—	10	120	**ECX11E1AAA-_**	**ECX11E4AAA-_**	**ECX11E8AAA-_**	**XTAE015B10A_**
Size F								
18	115	2	—	120	**ECX11F1AAA-_**	**ECX11F4AAA-_**	**ECX11F8AAA-_**	**XTAE018C10A_**
	208	2	5	120	**ECX11F1AAA-_**	**ECX11F4AAA-_**	**ECX11F8AAA-_**	**XTAE018C10A_**
	230	3	5	120	**ECX11F1AAA-_**	**ECX11F4AAA-_**	**ECX11F8AAA-_**	**XTAE018C10A_**
	380	—	7-1/2	110	**ECX11F1AAA-_**	**ECX11F4AAA-_**	**ECX11F8AAA-_**	**XTAE018C10A_**
	460	—	10	120	**ECX11F1AAA-_**	**ECX11F4AAA-_**	**ECX11F8AAA-_**	**XTAE018C10A_**
	575	—	15	120	**ECX11F1AAA-_**	**ECX11F4AAA-_**	**ECX11F8AAA-_**	**XTAE018C10A_**

Notes

① 1 hp = 0.746 kW.

② Contact factory for other voltage options.

③ Voltage is listed at 60 Hz unless otherwise noted. Other voltages available upon request.

④ Select proper "XTOB" overload amperage range as per motor FLA, see **Page V10-T3-9**.

⑤ The catalog numbers listed in the Type 4X column are for Type 4X 304-Grade stainless steel, as indicated by the **seventh** digit.
Example: ECX11B**4**AAA-_. To order Type 4X 316-Grade stainless steel, change that digit to **9**. To order Type 4 painted steel, change that digit to **3**.
To order non-metallic, change that digit to **5**. For details on these alternate enclosures, see **Tab 13**.

Class ECX11—Non-Combination Non-Reversing Starter with CPT, continued

Amps	Maximum hp ① Motor Voltage ②	Single-Phase	Three-Phase	Coil Voltage at 60 Hz ③	Type 1/IP23 Catalog Number ④	Type 4X/IP66 ⑤ Catalog Number ④	Type 12/IP65 Catalog Number ④	Component Catalog Number ④
Size G								
25	115	2	—	120	**ECX11G1AAA-_**	**ECX11G4AAA-_**	**ECX11G8AAA-_**	**XTAE025C10A_**
	208	3	7-1/2	120	**ECX11G1AAA-_**	**ECX11G4AAA-_**	**ECX11G8AAA-_**	**XTAE025C10A_**
	230	5	7-1/2	120	**ECX11G1AAA-_**	**ECX11G4AAA-_**	**ECX11G8AAA-_**	**XTAE025C10A_**
	380	—	10	110	**ECX11G1AAA-_**	**ECX11G4AAA-_**	**ECX11G8AAA-_**	**XTAE025C10A_**
	460	—	15	120	**ECX11G1AAA-_**	**ECX11G4AAA-_**	**ECX11G8AAA-_**	**XTAE025C10A_**
	575	—	20	120	**ECX11G1AAA-_**	**ECX11G4AAA-_**	**ECX11G8AAA-_**	**XTAE025C10A_**
Size H								
32	115	3	—	120	**ECX11H1AAA-_**	**ECX11H4AAA-_**	**ECX11H8AAA-_**	**XTAE032C10A_**
	208	5	10	120	**ECX11H1AAA-_**	**ECX11H4AAA-_**	**ECX11H8AAA-_**	**XTAE032C10A_**
	230	5	10	120	**ECX11H1AAA-_**	**ECX11H4AAA-_**	**ECX11H8AAA-_**	**XTAE032C10A_**
	380	—	15	110	**ECX11H1AAA-_**	**ECX11H4AAA-_**	**ECX11H8AAA-_**	**XTAE032C10A_**
	460	—	20	120	**ECX11H1AAA-_**	**ECX11H4AAA-_**	**ECX11H8AAA-_**	**XTAE032C10A_**
	575	—	25	120	**ECX11H1AAA-_**	**ECX11H4AAA-_**	**ECX11H8AAA-_**	**XTAE032C10A_**
Size J								
40	115	3	—	120	**ECX11J1AAA-_**	**ECX11J4AAA-_**	**ECX11J8AAA-_**	**XTAE040D00A_**
	208	5	10	120	**ECX11J1AAA-_**	**ECX11J4AAA-_**	**ECX11J8AAA-_**	**XTAE040D00A_**
	230	7-1/2	15	120	**ECX11J1AAA-_**	**ECX11J4AAA-_**	**ECX11J8AAA-_**	**XTAE040D00A_**
	380	—	15	110	**ECX11J1AAA-_**	**ECX11J4AAA-_**	**ECX11J8AAA-_**	**XTAE040D00A_**
	460	—	30	120	**ECX11J1AAA-_**	**ECX11J4AAA-_**	**ECX11J8AAA-_**	**XTAE040D00A_**
	575	—	40	120	**ECX11J1AAA-_**	**ECX11J4AAA-_**	**ECX11J8AAA-_**	**XTAE040D00A_**
Size K								
50	115	3	—	120	**ECX11K1AAA-_**	**ECX11K4AAA-_**	**ECX11K8AAA-_**	**XTAE050D00A_**
	208	7-1/2	15	120	**ECX11K1AAA-_**	**ECX11K4AAA-_**	**ECX11K8AAA-_**	**XTAE050D00A_**
	230	10	20	120	**ECX11K1AAA-_**	**ECX11K4AAA-_**	**ECX11K8AAA-_**	**XTAE050D00A_**
	380	—	20	110	**ECX11K1AAA-_**	**ECX11K4AAA-_**	**ECX11K8AAA-_**	**XTAE050D00A_**
	460	—	40	120	**ECX11K1AAA-_**	**ECX11K4AAA-_**	**ECX11K8AAA-_**	**XTAE050D00A_**
	575	—	50	120	**ECX11K1AAA-_**	**ECX11K4AAA-_**	**ECX11K8AAA-_**	**XTAE050D00A_**
Size L								
65	115	5	—	120	**ECX11L1AAA-_**	**ECX11L4AAA-_**	**ECX11L8AAA-_**	**XTAE065D00A_**
	208	10	20	120	**ECX11L1AAA-_**	**ECX11L4AAA-_**	**ECX11L8AAA-_**	**XTAE065D00A_**
	230	15	25	120	**ECX11L1AAA-_**	**ECX11L4AAA-_**	**ECX11L8AAA-_**	**XTAE065D00A_**
	380	—	30	110	**ECX11L1AAA-_**	**ECX11L4AAA-_**	**ECX11L8AAA-_**	**XTAE065D00A_**
	460	—	50	120	**ECX11L1AAA-_**	**ECX11L4AAA-_**	**ECX11L8AAA-_**	**XTAE065D00A_**
	575	—	60	120	**ECX11L1AAA-_**	**ECX11L4AAA-_**	**ECX11L8AAA-_**	**XTAE065D00A_**

Notes

① 1 hp = 0.746 kW.

② Contact factory for other voltage options.

③ Voltage is listed at 60 Hz unless otherwise noted. Other voltages available upon request.

④ Select proper "XTOB" overload amperage range as per motor FLA, see **Page V10-T3-9**.

⑤ The catalog numbers listed in the Type 4X column are for Type 4X 304-Grade stainless steel, as indicated by the **seventh** digit.
Example: ECX11G**4**AAA-_. To order Type 4X 316-Grade stainless steel, change that digit to **9**. To order Type 4 painted steel, change that digit to **3**.
To order non-metallic, change that digit to **5**. For details on these alternate enclosures, see **Tab 13**.

Class ECX11—Non-Combination Non-Reversing Starter with CPT, continued

Amps	Maximum hp ① Motor Voltage ②	Single-Phase	Three-Phase	Coil Voltage at 60 Hz ③	Type 1/IP23 Catalog Number ④	Type 4X/IP66 ⑤ Catalog Number ④	Type 12/IP65 Catalog Number ④	Component Catalog Number ④
Size M								
80	115	7-1/2	—	120	**ECX11M1AAA-_**	**ECX11M4AAA-_**	**ECX11M8AAA-_**	**XTAE080F00A_**
	208	15	25	120	**ECX11M1AAA-_**	**ECX11M4AAA-_**	**ECX11M8AAA-_**	**XTAE080F00A_**
	230	15	30	120	**ECX11M1AAA-_**	**ECX11M4AAA-_**	**ECX11M8AAA-_**	**XTAE080F00A_**
	380	—	50	110	**ECX11M1AAA-_**	**ECX11M4AAA-_**	**ECX11M8AAA-_**	**XTAE080F00A_**
	460	—	60	120	**ECX11M1AAA-_**	**ECX11M4AAA-_**	**ECX11M8AAA-_**	**XTAE080F00A_**
	575	—	75	120	**ECX11M1AAA-_**	**ECX11M4AAA-_**	**ECX11M8AAA-_**	**XTAE080F00A_**
Size N								
95	115	7-1/2	—	120	**ECX11N1AAA-_**	**ECX11N4AAA-_**	**ECX11N8AAA-_**	**XTAE095F00A_**
	208	15	25	120	**ECX11N1AAA-_**	**ECX11N4AAA-_**	**ECX11N8AAA-_**	**XTAE095F00A_**
	230	15	40	120	**ECX11N1AAA-_**	**ECX11N4AAA-_**	**ECX11N8AAA-_**	**XTAE095F00A_**
	380	—	60	110	**ECX11N1AAA-_**	**ECX11N4AAA-_**	**ECX11N8AAA-_**	**XTAE095F00A_**
	460	—	75	120	**ECX11N1AAA-_**	**ECX11N4AAA-_**	**ECX11N8AAA-_**	**XTAE095F00A_**
	575	—	100	120	**ECX11N1AAA-_**	**ECX11N4AAA-_**	**ECX11N8AAA-_**	**XTAE095F00A_**
Size P								
115	115	10	—	120	**ECX11P1AAA-_**	**ECX11P4AAA-_**	**ECX11P8AAA-_**	**XTAE115G00A_**
	208	25	40	120	**ECX11P1AAA-_**	**ECX11P4AAA-_**	**ECX11P8AAA-_**	**XTAE115G00A_**
	230	25	50	120	**ECX11P1AAA-_**	**ECX11P4AAA-_**	**ECX11P8AAA-_**	**XTAE115G00A_**
	380	—	60	110	**ECX11P1AAA-_**	**ECX11P4AAA-_**	**ECX11P8AAA-_**	**XTAE115G00A_**
	460	—	100	120	**ECX11P1AAA-_**	**ECX11P4AAA-_**	**ECX11P8AAA-_**	**XTAE115G00A_**
	575	—	125	120	**ECX11P1AAA-_**	**ECX11P4AAA-_**	**ECX11P8AAA-_**	**XTAE115G00A_**
Size Q								
150	115	15	—	120	**ECX11Q1AAA-_**	**ECX11Q4AAA-_**	**ECX11Q8AAA-_**	**XTAE150G00A_**
	208	25	40	120	**ECX11Q1AAA-_**	**ECX11Q4AAA-_**	**ECX11Q8AAA-_**	**XTAE150G00A_**
	230	30	60	120	**ECX11Q1AAA-_**	**ECX11Q4AAA-_**	**ECX11Q8AAA-_**	**XTAE150G00A_**
	380	—	60	110	**ECX11Q1AAA-_**	**ECX11Q4AAA-_**	**ECX11Q8AAA-_**	**XTAE150G00A_**
	460	—	125	120	**ECX11Q1AAA-_**	**ECX11Q4AAA-_**	**ECX11Q8AAA-_**	**XTAE150G00A_**
	575	—	150	120	**ECX11Q1AAA-_**	**ECX11Q4AAA-_**	**ECX11Q8AAA-_**	**XTAE150G00A_**

Notes

① 1 hp = 0.746 kW.

② Contact factory for other voltage options.

③ Voltage is listed at 60 Hz unless otherwise noted. Other voltages available upon request.

④ Select proper "XTOB" overload amperage range as per motor FLA, see **Page V10-T3-9**.

⑤ The catalog numbers listed in the Type 4X column are for Type 4X 304-Grade stainless steel, as indicated by the **seventh** digit.
Example: ECX11M**4**AAA-_. To order Type 4X 316-Grade stainless steel, change that digit to **9**. To order Type 4 painted steel, change that digit to **3**.
To order non-metallic, change that digit to **5**. For details on these alternate enclosures, see **Tab 13**.

Combination Starters

Class ECX19—Combination Non-Reversing Starter—Fusible/Non-Fusible Disconnect

Amps	Maximum hp ① Motor Voltage ②	Single-Phase	Three-Phase	Coil Voltage at 60 Hz ③	Fuse Clips	Type 1/IP23 Catalog Number ④	Type 4X/IP66 ⑤ Catalog Number ④	Type 12/IP65 Catalog Number ④	Component Catalog Number ④
Size B									
7	—	—	—	—	30A	**ECX19B1AAA-_**	**ECX19B4AAA-_**	**ECX19B8AAA-_**	**XTAE007B10A_**
	115	1/4	—	120		**ECX19B1AAC-_**	**ECX19B4AAC-_**	**ECX19B8AAC-_**	**XTAE007B10A_**
	208	3/4	1-1/2	208		**ECX19B1EAC-_**	**ECX19B4EAC-_**	**ECX19B8EAC-_**	**XTAE007B10E_**
	230	1	2	240		**ECX19B1BAC-_**	**ECX19B4BAC-_**	**ECX19B8BAC-_**	**XTAE007B10B_**
	380	—	3	380/50 Hz		**ECX19B1LAC-_**	**ECX19B4LAC-_**	**ECX19B8LAC-_**	**XTAE007B10L_**
	460	—	3	480		**ECX19B1CAC-_**	**ECX19B4CAC-_**	**ECX19B8CAC-_**	**XTAE007B10C_**
	575	—	5	600		**ECX19B1DAC-_**	**ECX19B4DAC-_**	**ECX19B8DAC-_**	**XTAE007B10D_**
Size C									
9	—	—	—	—	30A	**ECX19C1AAA-_**	**ECX19C4AAA-_**	**ECX19C8AAA-_**	**XTAE009B10A_**
	115	1/2	—	120		**ECX19C1AAC-_**	**ECX19C4AAC-_**	**ECX19C8AAC-_**	**XTAE009B10A_**
	208	1	2	208		**ECX19C1EAC-_**	**ECX19C4EAC-_**	**ECX19C8EAC-_**	**XTAE009B10E_**
	230	1-1/2	3	240		**ECX19C1BAC-_**	**ECX19C4BAC-_**	**ECX19C8BAC-_**	**XTAE009B10B_**
	380	—	5	380/50 Hz		**ECX19C1LAC-_**	**ECX19C4LAC-_**	**ECX19C8LAC-_**	**XTAE009B10L_**
	460	—	5	480		**ECX19C1CAC-_**	**ECX19C4CAC-_**	**ECX19C8CAC-_**	**XTAE009B10C_**
	575	—	7-1/2	600		**ECX19C1DAC-_**	**ECX19C4DAC-_**	**ECX19C8DAC-_**	**XTAE009B10D_**
Size D									
12	—	—	—	—	30A	**ECX19D1AAA-_**	**ECX19D4AAA-_**	**ECX19D8AAA-_**	**XTAE012B10A_**
	115	1/2	—	120		**ECX19D1AAC-_**	**ECX19D4AAC-_**	**ECX19D8AAC-_**	**XTAE012B10A_**
	208	1-1/2	3	208		**ECX19D1EAC-_**	**ECX19D4EAC-_**	**ECX19D8EAC-_**	**XTAE012B10E_**
	230	2	3	240		**ECX19D1BAC-_**	**ECX19D4BAC-_**	**ECX19D8BAC-_**	**XTAE012B10B_**
	380	—	5	380/50 Hz		**ECX19D1LAC-_**	**ECX19D4LAC-_**	**ECX19D8LAC-_**	**XTAE012B10L_**
	460	—	7-1/2	480		**ECX19D1CAC-_**	**ECX19D4CAC-_**	**ECX19D8CAC-_**	**XTAE012B10C_**
	575	—	10	600		**ECX19D1DAC-_**	**ECX19D4DAC-_**	**ECX19D8DAC-_**	**XTAE012B10D_**
Size E									
15	—	—	—	—	30A	**ECX19E1AAA-_**	**ECX19E4AAA-_**	**ECX19E8AAA-_**	**XTAE015B10A_**
	115	3/4	—	120		**ECX19E1AAC-_**	**ECX19E4AAC-_**	**ECX19E8AAC-_**	**XTAE015B10A_**
	208	2	3	208		**ECX19E1EAC-_**	**ECX19E4EAC-_**	**ECX19E8EAC-_**	**XTAE015B10E_**
	230	2	3	240		**ECX19E1BAC-_**	**ECX19E4BAC-_**	**ECX19E8BAC-_**	**XTAE015B10B_**
	380	—	5	380/50 Hz		**ECX19E1LAC-_**	**ECX19E4LAC-_**	**ECX19E8LAC-_**	**XTAE015B10L_**
	460	—	7-1/2	480		**ECX19E1CAC-_**	**ECX19E4CAC-_**	**ECX19E8CAC-_**	**XTAE015B10C_**
	575	—	10	600		**ECX19E1DAC-_**	**ECX19E4DAC-_**	**ECX19E8DAC-_**	**XTAE015B10D_**

Notes

① 1 hp = 0.746 kW.

② Contact factory for other voltage options.

③ Voltage is listed at 60 Hz unless otherwise noted. Other voltages available upon request.

④ Select proper "XTOB" overload amperage range as per motor FLA, see **Page V10-T3-9**.

⑤ The catalog numbers listed in the Type 4X column are for Type 4X 304-Grade stainless steel, as indicated by the **seventh** digit.
Example: ECX19B**4**AAA-_. To order Type 4X 316-Grade stainless steel, change that digit to **9**. To order Type 4 painted steel, change that digit to **3**.
To order non-metallic, change that digit to **5**. For details on these alternate enclosures, see **Tab 13**.

Class ECX19—Combination Non-Reversing Starter—Fusible/Non-Fusible Disconnect, continued

Amps	Maximum hp ① Motor Voltage ②	Single-Phase	Three-Phase	Coil Voltage at 60 Hz ③	Fuse Clips	Type 1/IP23 Catalog Number ④	Type 4X/IP66 ⑤ Catalog Number ④	Type 12/IP65 Catalog Number ④	Component Catalog Number ④
Size F									
18	—	—	—	—	30A	**ECX19F1AAA-_**	**ECX19F4AAA-_**	**ECX19F8AAA-_**	**XTAE018C10A_**
	115	2	—	120		**ECX19F1AAC-_**	**ECX19F4AAC-_**	**ECX19F8AAC-_**	**XTAE018C10A_**
	208	2	5	208		**ECX19F1EAC-_**	**ECX19F4EAC-_**	**ECX19F8EAC-_**	**XTAE018C10E_**
	230	3	5	240		**ECX19F1BAC-_**	**ECX19F4BAC-_**	**ECX19F8BAC-_**	**XTAE018C10B_**
	380	—	7-1/2	380/50 Hz		**ECX19F1LAC-_**	**ECX19F4LAC-_**	**ECX19F8LAC-_**	**XTAE018C10L_**
	460	—	10	480		**ECX19F1CAC-_**	**ECX19F4CAC-_**	**ECX19F8CAC-_**	**XTAE018C10C_**
	575	—	15	600		**ECX19F1DAC-_**	**ECX19F4DAC-_**	**ECX19F8DAC-_**	**XTAE018C10D_**
Size G									
25	—	—	—	—	30A	**ECX19G1AAA-_**	**ECX19G4AAA-_**	**ECX19G8AAA-_**	**XTAE025C10A_**
	115	2	—	120		**ECX19G1AAC-_**	**ECX19G4AAC-_**	**ECX19G8AAC-_**	**XTAE025C10A_**
	208	3	7-1/2	208		**ECX19G1EAC-_**	**ECX19G4EAC-_**	**ECX19G8EAC-_**	**XTAE025C10E_**
	230	5	7-1/2	240		**ECX19G1BAC-_**	**ECX19G4BAC-_**	**ECX19G8BAC-_**	**XTAE025C10B_**
	380	—	10	380/50 Hz		**ECX19G1LAC-_**	**ECX19G4LAC-_**	**ECX19G8LAC-_**	**XTAE025C10L_**
	460	—	15	480		**ECX19G1CAC-_**	**ECX19G4CAC-_**	**ECX19G8CAC-_**	**XTAE025C10C_**
	575	—	20	600		**ECX19G1DAC-_**	**ECX19G4DAC-_**	**ECX19G8DAC-_**	**XTAE025C10D_**
Size H									
32	—	—	—	—	60A	**ECX19H1AAA-_**	**ECX19H4AAA-_**	**ECX19H8AAA-_**	**XTAE032C10A_**
	115	3	—	120		**ECX19H1AAE-_**	**ECX19H4AAE-_**	**ECX19H8AAE-_**	**XTAE032C10A_**
	208	5	10	208		**ECX19H1EAE-_**	**ECX19H4EAE-_**	**ECX19H8EAE-_**	**XTAE032C10E_**
	230	5	10	240		**ECX19H1BAE-_**	**ECX19H4BAE-_**	**ECX19H8BAE-_**	**XTAE032C10B_**
	380	—	15	380/50 Hz		**ECX19H1LAE-_**	**ECX19H4LAE-_**	**ECX19H8LAE-_**	**XTAE032C10L_**
	460	—	20	480		**ECX19H1CAE-_**	**ECX19H4CAE-_**	**ECX19H8CAE-_**	**XTAE032C10C_**
	575	—	25	600		**ECX19H1DAE-_**	**ECX19H4DAE-_**	**ECX19H8DAE-_**	**XTAE032C10D_**
Size J									
40	—	—	—	—	60A	**ECX19J1AAA-_**	**ECX19J4AAA-_**	**ECX19J8AAA-_**	**XTAE040D00A_**
	115	3	—	120		**ECX19J1AAE-_**	**ECX19J4AAE-_**	**ECX19J8AAE-_**	**XTAE040D00A_**
	208	5	10	208		**ECX19J1EAE-_**	**ECX19J4EAE-_**	**ECX19J8EAE-_**	**XTAE040D00E_**
	230	7-1/2	15	240		**ECX19J1BAE-_**	**ECX19J4BAE-_**	**ECX19J8BAE-_**	**XTAE040D00B_**
	380	—	15	380/50 Hz		**ECX19J1LAE-_**	**ECX19J4LAE-_**	**ECX19J8LAE-_**	**XTAE040D00L_**
	460	—	30	480		**ECX19J1CAE-_**	**ECX19J4CAE-_**	**ECX19J8CAE-_**	**XTAE040D00C_**
	575	—	40	600		**ECX19J1DAE-_**	**ECX19J4DAE-_**	**ECX19J8DAE-_**	**XTAE040D00D_**
Size K									
50	—	—	—	—	100A	**ECX19K1AAA-_**	**ECX19K4AAA-_**	**ECX19K8AAA-_**	**XTAE050D00A_**
	115	3	—	120		**ECX19K1AAE-_**	**ECX19K4AAG-_**	**ECX19K8AAG-_**	**XTAE050D00A_**
	208	7-1/2	15	208		**ECX19K1EAE-_**	**ECX19K4EAG-_**	**ECX19K8EAG-_**	**XTAE050D00E_**
	230	10	20	240		**ECX19K1BAE-_**	**ECX19K4BAG-_**	**ECX19K8BAG-_**	**XTAE050D00B_**
	380	—	20	380/50 Hz		**ECX19K1LAE-_**	**ECX19K4LAG-_**	**ECX19K8LAG-_**	**XTAE050D00L_**
	460	—	40	480		**ECX19K1CAE-_**	**ECX19K4CAG-_**	**ECX19K8CAG-_**	**XTAE050D00C_**
	575	—	50	600		**ECX19K1DAE-_**	**ECX19K4DAG-_**	**ECX19K8DAG-_**	**XTAE050D00D_**

Notes

① 1 hp = 0.746 kW.

② Contact factory for other voltage options.

③ Voltage is listed at 60 Hz unless otherwise noted. Other voltages available upon request.

④ Select proper "XTOB" overload amperage range as per motor FLA, see **Page V10-T3-9**.

⑤ The catalog numbers listed in the Type 4X column are for Type 4X 304-Grade stainless steel, as indicated by the **seventh** digit.
Example: ECX19F**4**AAA-_. To order Type 4X 316-Grade stainless steel, change that digit to **9**. To order Type 4 painted steel, change that digit to **3**.
To order non-metallic, change that digit to **5**. For details on these alternate enclosures, see **Tab 13**.

Class ECX19—Combination Non-Reversing Starter—Fusible/Non-Fusible Disconnect, continued

Amps	Maximum hp ① Motor Voltage ②	Single-Phase	Three-Phase	Coil Voltage at 60 Hz ②	Fuse Clips	Type 1/IP23 Catalog Number ④	Type 4X/IP66 ⑤ Catalog Number ④	Type 12/IP65 Catalog Number ④	Component Catalog Number ④
Size L									
65	—	—	—	—	100A	**ECX19L1AAA-_**	**ECX19L4AAA-_**	**ECX19L8AAA-_**	**XTAE065D00A_**
	115	5	—	120		**ECX19L1AAG-_**	**ECX19L4AAG-_**	**ECX19L8AAG-_**	**XTAE065D00A_**
	208	10	20	208		**ECX19L1EAG-_**	**ECX19L4EAG-_**	**ECX19L8EAG-_**	**XTAE065D00E_**
	230	15	25	240		**ECX19L1BAG-_**	**ECX19L4BAG-_**	**ECX19L8BAG-_**	**XTAE065D00B_**
	380	—	30	380/50 Hz		**ECX19L1LAG-_**	**ECX19L4LAG-_**	**ECX19L8LAG-_**	**XTAE065D00L_**
	460	—	50	480		**ECX19L1CAG-_**	**ECX19L4CAG-_**	**ECX19L8CAG-_**	**XTAE065D00C_**
	575	—	60	600		**ECX19L1DAG-_**	**ECX19L4DAG-_**	**ECX19L8DAG-_**	**XTAE065D00D_**
Size M									
80	—	—	—	—	100A	**ECX19M1AAA-_**	**ECX19M4AAA-_**	**ECX19M8AAA-_**	**XTAE080F00A_**
	115	7-1/2	—	120		**ECX19M1AAG-_**	**ECX19M4AAG-_**	**ECX19M8AAG-_**	**XTAE080F00A_**
	208	15	25	208		**ECX19M1EAG-_**	**ECX19M4EAG-_**	**ECX19M8EAG-_**	**XTAE080F00E_**
	230	15	30	240		**ECX19M1BAG-_**	**ECX19M4BAG-_**	**ECX19M8BAG-_**	**XTAE080F00B_**
	380	—	50	380/50 Hz		**ECX19M1LAG-_**	**ECX19M4LAG-_**	**ECX19M8LAG-_**	**XTAE080F00L_**
	460	—	60	480		**ECX19M1CAG-_**	**ECX19M4CAG-_**	**ECX19M8CAG-_**	**XTAE080F00C_**
	575	—	75	600		**ECX19M1DAG-_**	**ECX19M4DAG-_**	**ECX19M8DAG-_**	**XTAE080F00D_**
Size N ⑥									
95	—	—	—	—	⑥	**ECX19N1AAA-_**	**ECX19N4AAA-_**	**ECX19N8AAA-_**	**XTAE095F00A_**
	115	7-1/2	—	120		**ECX19N1AAA-_**	**ECX19N4AAA-_**	**ECX19N8AAA-_**	**XTAE095F00A_**
	208	15	25	208		**ECX19N1EAA-_**	**ECX19N4EAA-_**	**ECX19N8EAA-_**	**XTAE095F00E_**
	230	15	40	240		**ECX19N1BAA-_**	**ECX19N4BAA-_**	**ECX19N8BAA-_**	**XTAE095F00B_**
	380	—	60	380/50 Hz		**ECX19N1LAA-_**	**ECX19N4LAA-_**	**ECX19N8LAA-_**	**XTAE095F00L_**
	460	—	75	480		**ECX19N1CAA-_**	**ECX19N4CAA-_**	**ECX19N8CAA-_**	**XTAE095F00C_**
	575	—	100	600		**ECX19N1DAA-_**	**ECX19N4DAA-_**	**ECX19N8DAA-_**	**XTAE095F00D_**
Size P ⑥									
105	—	—	—	—	⑥	**ECX19P1AAA-_**	**ECX19P4AAA-_**	**ECX19P8AAA-_**	**XTAE115G00A_**
	115	10	—	120		**ECX19P1AAA-_**	**ECX19P4AAA-_**	**ECX19P8AAA-_**	**XTAE115G00A_**
	208	25	30	208		**ECX19P1EAA-_**	**ECX19P4EAA-_**	**ECX19P8EAA-_**	**XTAE115G00E_**
	230	25	40	240		**ECX19P1BAA-_**	**ECX19P4BAA-_**	**ECX19P8BAA-_**	**XTAE115G00B_**
	380	—	60	380/50 Hz		**ECX19P1LAA-_**	**ECX19P4LAA-_**	**ECX19P8LAA-_**	**XTAE115G00L_**
	460	—	75	480		**ECX19P1CAA-_**	**ECX19P4CAA-_**	**ECX19P8CAA-_**	**XTAE115G00C_**
	575	—	100	600		**ECX19P1DAA-_**	**ECX19P4DAA-_**	**ECX19P8DAA-_**	**XTAE115G00D_**

Notes

① 1 hp = 0.746 kW.

② Contact factory for other voltage options.

③ Voltage is listed at 60 Hz unless otherwise noted. Other voltages available upon request.

④ Select proper "XTOB" overload amperage range as per motor FLA, see **Page V10-T3-9**.

⑤ The catalog numbers listed in the Type 4X column are for Type 4X 304-Grade stainless steel, as indicated by the **seventh** digit.
Example: ECX19L**4**AAA-_. To order Type 4X 316-Grade stainless steel, change that digit to **9**. To order Type 4 painted steel, change that digit to **3**.
To order non-metallic, change that digit to **5**. For details on these alternate enclosures, see **Tab 13**.

⑥ Non-fused disconnect only.

Class ECX20—Combination Reversing Starter—Fusible/Non-Fusible Disconnect

Amps	Maximum hp ① Motor Voltage ②	Single-Phase	Three-Phase	Coil Voltage at 60 Hz ③	Fuse Clips	Type 1/IP23 Catalog Number ④	Type 4X/IP66 ⑤ Catalog Number ④	Type 12/IP65 Catalog Number ④	Component Catalog Number ④
Size B									
7	—	—	—	—	30A	**ECX20B1AAA-_**	**ECX20B4AAA-_**	**ECX20B8AAA-_**	**XTAR007B10A_**
	115	1/4	—	120		**ECX20B1AAC-_**	**ECX20B4AAC-_**	**ECX20B8AAC-_**	**XTAR007B10A_**
	208	3/4	1-1/2	208		**ECX20B1EAC-_**	**ECX20B4EAC-_**	**ECX20B8EAC-_**	**XTAR007B10E_**
	230	1	2	240		**ECX20B1BAC-_**	**ECX20B4BAC-_**	**ECX20B8BAC-_**	**XTAR007B10B_**
	380	—	3	380/50 Hz		**ECX20B1LAC-_**	**ECX20B4LAC-_**	**ECX20B8LAC-_**	**XTAR007B10L_**
	460	—	3	480		**ECX20B1CAC-_**	**ECX20B4CAC-_**	**ECX20B8CAC-_**	**XTAR007B10C_**
	575	—	5	600		**ECX20B1DAC-_**	**ECX20B4DAC-_**	**ECX20B8DAC-_**	**XTAR007B10D_**
Size C									
9	—	—	—	—	30A	**ECX20C1AAA-_**	**ECX20C4AAA-_**	**ECX20C8AAA-_**	**XTAR009B10A_**
	115	1/2	—	120		**ECX20C1AAC-_**	**ECX20C4AAC-_**	**ECX20C8AAC-_**	**XTAR009B10A_**
	208	1	2	208		**ECX20C1EAC-_**	**ECX20C4EAC-_**	**ECX20C8EAC-_**	**XTAR009B10E_**
	230	1-1/2	3	240		**ECX20C1BAC-_**	**ECX20C4BAC-_**	**ECX20C8BAC-_**	**XTAR009B10B_**
	380	—	5	380/50 Hz		**ECX20C1LAC-_**	**ECX20C4LAC-_**	**ECX20C8LAC-_**	**XTAR009B10L_**
	460	—	5	480		**ECX20C1CAC-_**	**ECX20C4CAC-_**	**ECX20C8CAC-_**	**XTAR009B10C_**
	575	—	7-1/2	600		**ECX20C1DAC-_**	**ECX20C4DAC-_**	**ECX20C8DAC-_**	**XTAR009B10D_**
Size D									
12	—	—	—	—	30A	**ECX20D1AAA-_**	**ECX20D4AAA-_**	**ECX20D8AAA-_**	**XTAR012B10A_**
	115	1/2	—	120		**ECX20D1AAC-_**	**ECX20D4AAC-_**	**ECX20D8AAC-_**	**XTAR012B10A_**
	208	1-1/2	3	208		**ECX20D1EAC-_**	**ECX20D4EAC-_**	**ECX20D8EAC-_**	**XTAR012B10E_**
	230	2	3	240		**ECX20D1BAC-_**	**ECX20D4BAC-_**	**ECX20D8BAC-_**	**XTAR012B10B_**
	380	—	5	380/50 Hz		**ECX20D1LAC-_**	**ECX20D4LAC-_**	**ECX20D8LAC-_**	**XTAR012B10L_**
	460	—	7-1/2	480		**ECX20D1CAC-_**	**ECX20D4CAC-_**	**ECX20D8CAC-_**	**XTAR012B10C_**
	575	—	10	600		**ECX20D1DAC-_**	**ECX20D4DAC-_**	**ECX20D8DAC-_**	**XTAR012B10D_**
Size E									
15	—	—	—	—	30A	**ECX20E1AAA-_**	**ECX20E4AAA-_**	**ECX20E8AAA-_**	**XTAR015B10A_**
	115	3/4	—	120		**ECX20E1AAC-_**	**ECX20E4AAC-_**	**ECX20E8AAC-_**	**XTAR015B10A_**
	208	2	3	208		**ECX20E1EAC-_**	**ECX20E4EAC-_**	**ECX20E8EAC-_**	**XTAR015B10E_**
	230	2	3	240		**ECX20E1BAC-_**	**ECX20E4BAC-_**	**ECX20E8BAC-_**	**XTAR015B10B_**
	380	—	5	380/50 Hz		**ECX20E1LAC-_**	**ECX20E4LAC-_**	**ECX20E8LAC-_**	**XTAR015B10L_**
	460	—	7-1/2	480		**ECX20E1CAC-_**	**ECX20E4CAC-_**	**ECX20E8CAC-_**	**XTAR015B10C_**
	575	—	10	600		**ECX20E1DAC-_**	**ECX20E4DAC-_**	**ECX20E8DAC-_**	**XTAR015B10D_**

Notes

① 1 hp = 0.746 kW.

② Contact factory for other voltage options.

③ Voltage is listed at 60 Hz unless otherwise noted. Other voltages available upon request.

④ Select proper "XTOB" overload amperage range as per motor FLA, see **Page V10-T3-9**.

⑤ The catalog numbers listed in the Type 4X column are for Type 4X 304-Grade stainless steel, as indicated by the **seventh** digit.
Example: ECX20B**4**AAA-_. To order Type 4X 316-Grade stainless steel, change that digit to **9**. To order Type 4 painted steel, change that digit to **3**.
To order non-metallic, change that digit to **5**. For details on these alternate enclosures, see **Tab 13**.

Class ECX20—Combination Reversing Starter—Fusible/Non-Fusible Disconnect, continued

Amps	Maximum hp ① Motor Voltage ②	Single-Phase	Three-Phase	Coil Voltage at 60 Hz ③	Fuse Clips	Type 1/IP23 Catalog Number ④	Type 4X/IP66 ⑤ Catalog Number ④	Type 12/IP65 Catalog Number ④	Component Catalog Number ④
Size F									
18	—	—	—	—	30A	**ECX20F1AAA-_**	**ECX20F4AAA-_**	**ECX20F8AAA-_**	**XTAR018C10A_**
	115	2	—	120		**ECX20F1AAC-_**	**ECX20F4AAC-_**	**ECX20F8AAC-_**	**XTAR018C10A_**
	208	2	5	208		**ECX20F1EAC-_**	**ECX20F4EAC-_**	**ECX20F8EAC-_**	**XTAR018C10E_**
	230	3	5	240		**ECX20F1BAC-_**	**ECX20F4BAC-_**	**ECX20F8BAC-_**	**XTAR018C10B_**
	380	—	7-1/2	380/50 Hz		**ECX20F1LAC-_**	**ECX20F4LAC-_**	**ECX20F8LAC-_**	**XTAR018C10L_**
	460	—	10	480		**ECX20F1CAC-_**	**ECX20F4CAC-_**	**ECX20F8CAC-_**	**XTAR018C10C_**
	575	—	15	600		**ECX20F1DAC-_**	**ECX20F4DAC-_**	**ECX20F8DAC-_**	**XTAR018C10D_**
Size G									
25	—	—	—	—	30A	**ECX20G1AAA-_**	**ECX20G4AAA-_**	**ECX20G8AAA-_**	**XTAR025C10A_**
	115	2	—	120		**ECX20G1AAC-_**	**ECX20G4AAC-_**	**ECX20G8AAC-_**	**XTAR025C10A_**
	208	3	7-1/2	208		**ECX20G1EAC-_**	**ECX20G4EAC-_**	**ECX20G8EAC-_**	**XTAR025C10E_**
	230	5	7-1/2	240		**ECX20G1BAC-_**	**ECX20G4BAC-_**	**ECX20G8BAC-_**	**XTAR025C10B_**
	380	—	10	380/50 Hz		**ECX20G1LAC-_**	**ECX20G4LAC-_**	**ECX20G8LAC-_**	**XTAR025C10L_**
	460	—	15	480		**ECX20G1CAC-_**	**ECX20G4CAC-_**	**ECX20G8CAC-_**	**XTAR025C10C_**
	575	—	20	600		**ECX20G1DAC-_**	**ECX20G4DAC-_**	**ECX20G8DAC-_**	**XTAR025C10D_**
Size H									
32	—	—	—	—	60A	**ECX20H1AAA-_**	**ECX20H4AAA-_**	**ECX20H8AAA-_**	**XTAR032C10A_**
	115	3	—	120		**ECX20H1AAE-_**	**ECX20H4AAE-_**	**ECX20H8AAE-_**	**XTAR032C10A_**
	208	5	10	208		**ECX20H1EAE-_**	**ECX20H4EAE-_**	**ECX20H8EAE-_**	**XTAR032C10E_**
	230	5	10	240		**ECX20H1BAE-_**	**ECX20H4BAE-_**	**ECX20H8BAE-_**	**XTAR032C10B_**
	380	—	15	380/50 Hz		**ECX20H1LAE-_**	**ECX20H4LAE-_**	**ECX20H8LAE-_**	**XTAR032C10L_**
	460	—	20	480		**ECX20H1CAE-_**	**ECX20H4CAE-_**	**ECX20H8CAE-_**	**XTAR032C10C_**
	575	—	25	600		**ECX20H1DAE-_**	**ECX20H4DAE-_**	**ECX20H8DAE-_**	**XTAR032C10D_**
Size J									
40	—	—	—	—	60A	**ECX20J1AAA-_**	**ECX20J4AAA-_**	**ECX20J8AAA-_**	**XTAR040D00A_**
	115	3	—	120		**ECX20J1AAE-_**	**ECX20J4AAE-_**	**ECX20J8AAE-_**	**XTAR040D00A_**
	208	5	10	208		**ECX20J1EAE-_**	**ECX20J4EAE-_**	**ECX20J8EAE-_**	**XTAR040D00E_**
	230	7-1/2	15	240		**ECX20J1BAE-_**	**ECX20J4BAE-_**	**ECX20J8BAE-_**	**XTAR040D00B_**
	380	—	15	380/50 Hz		**ECX20J1LAE-_**	**ECX20J4LAE-_**	**ECX20J8LAE-_**	**XTAR040D00L_**
	460	—	30	480		**ECX20J1CAE-_**	**ECX20J4CAE-_**	**ECX20J8CAE-_**	**XTAR040D00C_**
	575	—	40	600		**ECX20J1DAE-_**	**ECX20J4DAE-_**	**ECX20J8DAE-_**	**XTAR040D00D_**
Size K									
50	—	—	—	—	100A	**ECX20K1AAA-_**	**ECX20K4AAA-_**	**ECX20K8AAA-_**	**XTAR050D00A_**
	115	3	—	120		**ECX20K1AAG-_**	**ECX20K4AAG-_**	**ECX20K8AAG-_**	**XTAR050D00A_**
	208	7-1/2	15	208		**ECX20K1EAG-_**	**ECX20K4EAG-_**	**ECX20K8EAG-_**	**XTAR050D00E_**
	230	10	20	240		**ECX20K1BAG-_**	**ECX20K4BAG-_**	**ECX20K8BAG-_**	**XTAR050D00B_**
	380	—	20	380/50 Hz		**ECX20K1LAG-_**	**ECX20K4LAG-_**	**ECX20K8LAG-_**	**XTAR050D00L_**
	460	—	40	480		**ECX20K1CAG-_**	**ECX20K4CAG-_**	**ECX20K8CAG-_**	**XTAR050D00C_**
	575	—	50	600		**ECX20K1DAG-_**	**ECX20K4DAG-_**	**ECX20K8DAG-_**	**XTAR050D00D_**

Notes

① 1 hp = 0.746 kW.

② Contact factory for other voltage options.

③ Voltage is listed at 60 Hz unless otherwise noted. Other voltages available upon request.

④ Select proper "XTOB" overload amperage range as per motor FLA, see **Page V10-T3-9**.

⑤ The catalog numbers listed in the Type 4X column are for Type 4X 304-Grade stainless steel, as indicated by the **seventh** digit.
Example: ECX20F**4**AAA-_. To order Type 4X 316-Grade stainless steel, change that digit to **9**. To order Type 4 painted steel, change that digit to **3**.
To order non-metallic, change that digit to **5**. For details on these alternate enclosures, see **Tab 13**.

Class ECX20—Combination Reversing Starter—Fusible/Non-Fusible Disconnect, continued

Amps	Maximum hp ① Motor Voltage ②	Single-Phase	Three-Phase	Coil Voltage at 60 Hz ③	Fuse Clips	Type 1/IP23 Catalog Number ④	Type 4X/IP66 ⑤ Catalog Number ④	Type 12/IP65 Catalog Number ④	Component Catalog Number ④
Size L									
65	—	—	—	—	100A	**ECX20L1AAA-_**	**ECX20L4AAA-_**	**ECX20L8AAA-_**	**XTAR065D00A_**
	115	5	—	120		**ECX20L1AAG-_**	**ECX20L4AAG-_**	**ECX20L8AAG-_**	**XTAR065D00A_**
	208	10	20	208		**ECX20L1EAG-_**	**ECX20L4EAG-_**	**ECX20L8EAG-_**	**XTAR065D00E_**
	230	15	25	240		**ECX20L1BAG-_**	**ECX20L4BAG-_**	**ECX20L8BAG-_**	**XTAR065D00B_**
	380	—	30	380/50 Hz		**ECX20L1LAG-_**	**ECX20L4LAG-_**	**ECX20L8LAG-_**	**XTAR065D00L_**
	460	—	50	480		**ECX20L1CAG-_**	**ECX20L4CAG-_**	**ECX20L8CAG-_**	**XTAR065D00C_**
	575	—	60	600		**ECX20L1DAG-_**	**ECX20L4DAG-_**	**ECX20L8DAG-_**	**XTAR065D00D_**
Size M									
80	—	—	—	—	100A	**ECX20M1AAA-_**	**ECX20M4AAA-_**	**ECX20M8AAA-_**	**XTAR080F00A_**
	115	7-1/2	—	120		**ECX20M1AAG-_**	**ECX20M4AAG-_**	**ECX20M8AAG-_**	**XTAR080F00A_**
	208	15	25	208		**ECX20M1EAG-_**	**ECX20M4EAG-_**	**ECX20M8EAG-_**	**XTAR080F00E_**
	230	15	30	240		**ECX20M1BAG-_**	**ECX20M4BAG-_**	**ECX20M8BAG-_**	**XTAR080F00B_**
	380	—	50	380/50 Hz		**ECX20M1LAG-_**	**ECX20M4LAG-_**	**ECX20M8LAG-_**	**XTAR080F00L_**
	460	—	60	480		**ECX20M1CAG-_**	**ECX20M4CAG-_**	**ECX20M8CAG-_**	**XTAR080F00C_**
	575	—	75	600		**ECX20M1DAG-_**	**ECX20M4DAG-_**	**ECX20M8DAG-_**	**XTAR080F00D_**
Size N ⑥									
95	—	—	—	—	⑥	**ECX20N1AAA-_**	**ECX20N4AAA-_**	**ECX20N8AAA-_**	**XTAR095F00A_**
	115	7-1/2	—	120		**ECX20N1AAA-_**	**ECX20N4AAA-_**	**ECX20N8AAA-_**	**XTAR095F00A_**
	208	15	25	208		**ECX20N1EAA-_**	**ECX20N4EAA-_**	**ECX20N8EAA-_**	**XTAR095F00E_**
	230	15	40	240		**ECX20N1BAA-_**	**ECX20N4BAA-_**	**ECX20N8BAA-_**	**XTAR095F00B_**
	380	—	60	380/50 Hz		**ECX20N1LAA-_**	**ECX20N4LAA-_**	**ECX20N8LAA-_**	**XTAR095F00L_**
	460	—	75	480		**ECX20N1CAA-_**	**ECX20N4CAA-_**	**ECX20N8CAA-_**	**XTAR095F00C_**
	575	—	100	600		**ECX20N1DAA-_**	**ECX20N4DAA-_**	**ECX20N8DAA-_**	**XTAR095F00D_**
Size P ⑥									
105	—	—	—	—	⑥	**ECX20P1AAA-_**	**ECX20P4AAA-_**	**ECX20P8AAA-_**	**XTAR115G00A_**
	115	10	—	120		**ECX20P1AAA-_**	**ECX20P4AAA-_**	**ECX20P8AAA-_**	**XTAR115G00A_**
	208	25	30	208		**ECX20P1EAA-_**	**ECX20P4EAA-_**	**ECX20P8EAA-_**	**XTAR115G00E_**
	230	25	40	240		**ECX20P1BAA-_**	**ECX20P4BAA-_**	**ECX20P8BAA-_**	**XTAR115G00B_**
	380	—	60	380/50 Hz		**ECX20P1LAA-_**	**ECX20P4LAA-_**	**ECX20P8LAA-_**	**XTAR115G00L_**
	460	—	75	480		**ECX20P1CAA-_**	**ECX20P4CAA-_**	**ECX20P8CAA-_**	**XTAR115G00C_**
	575	—	100	600		**ECX20P1DAA-_**	**ECX20P4DAA-**	**ECX20P8DAA-_**	**XTAR115G00D_**

Notes

① 1 hp = 0.746 kW.
② Contact factory for other voltage options.
③ Voltage is listed at 60 Hz unless otherwise noted. Other voltages available upon request.
④ Select proper "XTOB" overload amperage range as per motor FLA, see **Page V10-T3-9**.
⑤ The catalog numbers listed in the Type 4X column are for Type 4X 304-Grade stainless steel, as indicated by the **seventh** digit.
Example: ECX20L**4**AAA-_. To order Type 4X 316-Grade stainless steel, change that digit to **9**. To order Type 4 painted steel, change that digit to **3**.
To order non-metallic, change that digit to **5**. For details on these alternate enclosures, see **Tab 13**.
⑥ Non-fused disconnect only.

Class ECX25—Combination Non-Reversing Starter—Circuit Breaker

Amps	Maximum hp ① Motor Voltage ②	Single-Phase	Three-Phase	Coil Voltage at 60 Hz ③	Circuit Breaker	Type 1/IP23 Catalog Number ④	Type 4X/IP66 ⑤ Catalog Number ④	Type 12/IP65 Catalog Number ④	Component Catalog Number ④
Size B									
7	115	1/4	—	120	7A	**ECX25B1AAC-_**	**ECX25B4AAC-_**	**ECX25B8AAC-_**	**XTAE007B10A_**
	208	3/4	1-1/2	208		**ECX25B1EAC-_**	**ECX25B4EAC-_**	**ECX25B8EAC-_**	**XTAE007B10E_**
	230	1	2	240		**ECX25B1BAC-_**	**ECX25B4BAC-_**	**ECX25B8BAC-_**	**XTAE007B10B_**
	380	—	3	380/50 Hz		**ECX25B1LAC-_**	**ECX25B4LAC-_**	**ECX25B8LAC-_**	**XTAE007B10L_**
	460	—	3	480		**ECX25B1CAC-_**	**ECX25B4CAC-_**	**ECX25B8CAC-_**	**XTAE007B10C_**
	575	—	5	600		**ECX25B1DAC-_**	**ECX25B4DAC-_**	**ECX25B8DAC-_**	**XTAE007B10D_**
Size C									
9	115	1/2	—	120	15A	**ECX25C1AAD-_**	**ECX25C4AAD-_**	**ECX25C8AAD-_**	**XTAE009B10A_**
	208	1	2	208		**ECX25C1EAD-_**	**ECX25C4EAD-_**	**ECX25C8EAD-_**	**XTAE009B10E_**
	230	1-1/2	3	240		**ECX25C1BAD-_**	**ECX25C4BAD-_**	**ECX25C8BAD-_**	**XTAE009B10B_**
	380	—	5	380/50 Hz		**ECX25C1LAD-_**	**ECX25C4LAD-_**	**ECX25C8LAD-_**	**XTAE009B10L_**
	460	—	5	480		**ECX25C1CAD-_**	**ECX25C4CAD-_**	**ECX25C8CAD-_**	**XTAE009B10C_**
	575	—	7-1/2	600		**ECX25C1DAD-_**	**ECX25C4DAD-_**	**ECX25C8DAD-_**	**XTAE009B10D_**
Size D									
12	115	1/2	—	120	15A	**ECX25D1AAD-_**	**ECX25D4AAD-_**	**ECX25D8AAD-_**	**XTAE012B10A_**
	208	1-1/2	3	208		**ECX25D1EAD-_**	**ECX25D4EAD-_**	**ECX25D8EAD-_**	**XTAE012B10E_**
	230	2	3	240		**ECX25D1BAD-_**	**ECX25D4BAD-_**	**ECX25D8BAD-_**	**XTAE012B10B_**
	380	—	5	380/50 Hz		**ECX25D1LAD-_**	**ECX25D4LAD-_**	**ECX25D8LAD-_**	**XTAE012B10L_**
	460	—	7-1/2	480		**ECX25D1CAD-_**	**ECX25D4CAD-_**	**ECX25D8CAD-_**	**XTAE012B10C_**
	575	—	10	600		**ECX25D1DAD-_**	**ECX25D4DAD-_**	**ECX25D8DAD-_**	**XTAE012B10D_**
Size E									
15	115	3/4	—	120	30A	**ECX25E1AAE-_**	**ECX25E4AAE-_**	**ECX25E8AAE-_**	**XTAE015B10A_**
	208	2	3	208		**ECX25E1EAE-_**	**ECX25E4EAE-_**	**ECX25E8EAE-_**	**XTAE015B10E_**
	230	2	3	240		**ECX25E1BAE-_**	**ECX25E4BAE-_**	**ECX25E8BAE-_**	**XTAE015B10B_**
	380	—	5	380/50 Hz		**ECX25E1LAE-_**	**ECX25E4LAE-_**	**ECX25E8LAE-_**	**XTAE015B10L_**
	460	—	7-1/2	480		**ECX25E1CAE-_**	**ECX25E4CAE-_**	**ECX25E8CAE-_**	**XTAE015B10C_**
	575	—	10	600		**ECX25E1DAE-_**	**ECX25E4DAE-_**	**ECX25E8DAE-_**	**XTAE015B10D_**
Size F									
18	115	2	—	120	30A	**ECX25F1AAE-_**	**ECX25F4AAE-_**	**ECX25F8AAE-_**	**XTAE018C10A_**
	208	2	5	208		**ECX25F1EAE-_**	**ECX25F4EAE-_**	**ECX25F8EAE-_**	**XTAE018C10E_**
	230	3	5	240		**ECX25F1BAE-_**	**ECX25F4BAE-_**	**ECX25F8BAE-_**	**XTAE018C10B_**
	380	—	7-1/2	380/50 Hz		**ECX25F1LAE-_**	**ECX25F4LAE-_**	**ECX25F8LAE-_**	**XTAE018C10L_**
	460	—	10	480		**ECX25F1CAE-_**	**ECX25F4CAE-_**	**ECX25F8CAE-_**	**XTAE018C10C_**
	575	—	15	600		**ECX25F1DAE-_**	**ECX25F4DAE-_**	**ECX25F8DAE-_**	**XTAE018C10D_**

Notes

① 1 hp = 0.746 kW.

② Contact factory for other voltage options.

③ Voltage is listed at 60 Hz unless otherwise noted. Other voltages available upon request.

④ Select proper "XTOB" overload amperage range as per motor FLA, see **Page V10-T3-9**.

⑤ The catalog numbers listed in the Type 4X column are for Type 4X 304-Grade stainless steel, as indicated by the **seventh** digit.
Example: ECX25B**4**AAA-_. To order Type 4X 316-Grade stainless steel, change that digit to **9**. To order Type 4 painted steel, change that digit to **3**.
To order non-metallic, change that digit to **5**. For details on these alternate enclosures, see **Tab 13**.

Class ECX25—Combination Non-Reversing Starter—Circuit Breaker, continued

Amps	Maximum hp ① Motor Voltage ②	Single-Phase	Three-Phase	Coil Voltage at 60 Hz ③	Circuit Breaker	Type 1/IP23 Catalog Number ④	Type 4X/IP66 ⑤ Catalog Number ④	Type 12/IP65 Catalog Number ④	Component Catalog Number ④
Size G									
25	115	2	—	120	50A	**ECX25G1AAF-_**	**ECX25G4AAF-_**	**ECX25G8AAF-_**	**XTAE025C10A_**
	208	3	7-1/2	208		**ECX25G1EAF-_**	**ECX25G4EAF-_**	**ECX25G8EAF-_**	**XTAE025C10E_**
	230	5	7-1/2	240		**ECX25G1BAF-_**	**ECX25G4BAF-_**	**ECX25G8BAF-_**	**XTAE025C10B_**
	380	—	10	380/50 Hz		**ECX25G1LAF-_**	**ECX25G4LAF-_**	**ECX25G8LAF-_**	**XTAE025C10L_**
	460	—	15	480		**ECX25G1CAF-_**	**ECX25G4CAF-_**	**ECX25G8CAF-_**	**XTAE025C10C_**
	575	—	20	600		**ECX25G1DAF-_**	**ECX25G4DAF-_**	**ECX25G8DAF-_**	**XTAE025C10D_**
Size H									
32	115	3	—	120	50A	**ECX25H1AAF-_**	**ECX25H4AAF-_**	**ECX25H8AAF-_**	**XTAE032C10A_**
	208	5	10	208		**ECX25H1EAF-_**	**ECX25H4EAF-_**	**ECX25H8EAF-_**	**XTAE032C10E_**
	230	5	10	240		**ECX25H1BAF-_**	**ECX25H4BAF-_**	**ECX25H8BAF-_**	**XTAE032C10B_**
	380	—	15	380/50 Hz		**ECX25H1LAF-_**	**ECX25H4LAF-_**	**ECX25H8LAF-_**	**XTAE032C10L_**
	460	—	20	480		**ECX25H1CAF-_**	**ECX25H4CAF-_**	**ECX25H8CAF-_**	**XTAE032C10C_**
	575	—	25	600		**ECX25H1DAF-_**	**ECX25H4DAF-_**	**ECX25H8DAF-_**	**XTAE032C10D_**
Size J									
40	115	3	—	120	50A	**ECX25J1AAF-_**	**ECX25J4AAF-_**	**ECX25J8AAF-_**	**XTAE040D00A_**
	208	5	10	208		**ECX25J1EAF-_**	**ECX25J4EAF-_**	**ECX25J8EAF-_**	**XTAE040D00E_**
	230	7-1/2	15	240		**ECX25J1BAF-_**	**ECX25J4BAF-_**	**ECX25J8BAF-_**	**XTAE040D00B_**
	380	—	15	380/50 Hz		**ECX25J1LAF-_**	**ECX25J4LAF-_**	**ECX25J8LAF-_**	**XTAE040D00L_**
	460	—	30	480		**ECX25J1CAF-_**	**ECX25J4CAF-_**	**ECX25J8CAF-_**	**XTAE040D00C_**
	575	—	40	600		**ECX25J1DAF-_**	**ECX25J4DAF-_**	**ECX25J8DAF-_**	**XTAE040D00D_**
Size K									
50	115	3	—	120	70A	**ECX25K1AAW-_**	**ECX25K4AAW-_**	**ECX25K8AAW-_**	**XTAE050D00A_**
	208	7-1/2	15	208		**ECX25K1EAW-_**	**ECX25K4EAW-_**	**ECX25K8EAW-_**	**XTAE050D00E_**
	230	10	20	240		**ECX25K1BAW-_**	**ECX25K4BAW-_**	**ECX25K8BAW-_**	**XTAE050D00B_**
	380	—	20	380/50 Hz		**ECX25K1LAW-_**	**ECX25K4LAW-_**	**ECX25K8LAW-_**	**XTAE050D00L_**
	460	—	40	480		**ECX25K1CAW-_**	**ECX25K4CAW-_**	**ECX25K8CAW-_**	**XTAE050D00C_**
	575	—	50	600		**ECX25K1DAW-_**	**ECX25K4DAW-_**	**ECX25K8DAW-_**	**XTAE050D00D_**
Size L									
65	115	5	—	120	70A	**ECX25L1AAW-_**	**ECX25L4AAW-_**	**ECX25L8AAW-_**	**XTAE065D00A_**
	208	10	20	208		**ECX25L1EAW-_**	**ECX25L4EAW-_**	**ECX25L8EAW-_**	**XTAE065D00E_**
	230	15	25	240		**ECX25L1BAW-_**	**ECX25L4BAW-_**	**ECX25L8BAW-_**	**XTAE065D00B_**
	380	—	30	380/50 Hz		**ECX25L1LAW-_**	**ECX25L4LAW-_**	**ECX25L8LAW-_**	**XTAE065D00L_**
	460	—	50	480		**ECX25L1CAW-_**	**ECX25L4CAW-_**	**ECX25L8CAW-_**	**XTAE065D00C_**
	575	—	60	600		**ECX25L1DAW-_**	**ECX25L4DAW-_**	**ECX25L8DAW-_**	**XTAE065D00D_**

Notes

① 1 hp = 0.746 kW.

② Contact factory for other voltage options.

③ Voltage is listed at 60 Hz unless otherwise noted. Other voltages available upon request.

④ Select proper "XTOB" overload amperage range as per motor FLA, see **Page V10-T3-9**.

⑤ The catalog numbers listed in the Type 4X column are for Type 4X 304-Grade stainless steel, as indicated by the **seventh** digit.
Example: ECX25G4AAA-_. To order Type 4X 316-Grade stainless steel, change that digit to **9**. To order Type 4 painted steel, change that digit to **3**.
To order non-metallic, change that digit to **5**. For details on these alternate enclosures, see **Tab 13**.

Class ECX25—Combination Non-Reversing Starter—Circuit Breaker, continued

Amps	Maximum hp ① Motor Voltage ②	Single-Phase	Three-Phase	Coil Voltage at 60 Hz ③	Circuit Breaker	Type 1/IP23 Catalog Number ④	Type 4X/IP66 ⑤ Catalog Number ④	Type 12/IP65 Catalog Number ④	Component Catalog Number ④
Size M									
80	115	7-1/2	—	120	100A	**ECX25M1AAG-_**	**ECX25M4AAG-_**	**ECX25M8AAG-_**	**XTAE080F00A_**
	208	15	25	208		**ECX25M1EAG-_**	**ECX25M4EAG-_**	**ECX25M8EAG-_**	**XTAE080F00E_**
	230	15	30	240		**ECX25M1BAG-_**	**ECX25M4BAG-_**	**ECX25M8BAG-_**	**XTAE080F00B_**
	380	—	50	380/50 Hz		**ECX25M1LAG-_**	**ECX25M4LAG-_**	**ECX25M8LAG-_**	**XTAE080F00L_**
	460	—	60	480		**ECX25M1CAG-_**	**ECX25M4CAG-_**	**ECX25M8CAG-_**	**XTAE080F00C_**
	575	—	75	600		**ECX25M1DAG-_**	**ECX25M4DAG-_**	**ECX25M8DAG-_**	**XTAE080F00D_**
Size N									
95	115	7-1/2	—	120	100A	**ECX25N1AAG-_**	**ECX25N4AAG-_**	**ECX25N8AAG-_**	**XTAE095F00A_**
	208	15	25	208		**ECX25N1EAG-_**	**ECX25N4EAG-_**	**ECX25N8EAG-_**	**XTAE095F00E_**
	230	15	40	240		**ECX25N1BAG-_**	**ECX25N4BAG-_**	**ECX25N8BAG-_**	**XTAE095F00B_**
	380	—	60	380/50 Hz		**ECX25N1LAG-_**	**ECX25N4LAG-_**	**ECX25N8LAG-_**	**XTAE095F00L_**
	460	—	75	480		**ECX25N1CAG-_**	**ECX25N4CAG-_**	**ECX25N8CAG-_**	**XTAE095F00C_**
	575	—	100	600		**ECX25N1DAG-_**	**ECX25N4DAG-_**	**ECX25N8DAG-_**	**XTAE095F00D_**
Size P									
115	115	10	—	120	150A	**ECX25P1AAH-_**	**ECX25P4AAH-_**	**ECX25P8AAH-_**	**XTAE115G00A_**
	208	25	40	208		**ECX25P1EAH-_**	**ECX25P4EAH-_**	**ECX25P8EAH-_**	**XTAE115G00E_**
	230	25	50	240		**ECX25P1BAH-_**	**ECX25P4BAH-_**	**ECX25P8BAH-_**	**XTAE115G00B_**
	380	—	60	380/50 Hz		**ECX25P1LAH-_**	**ECX25P4LAH-_**	**ECX25P8LAH-_**	**XTAE115G00L_**
	460	—	100	480		**ECX25P1CAH-_**	**ECX25P4CAH-_**	**ECX25P8CAH-_**	**XTAE115G00C_**
	575	—	125	600		**ECX25P1DAH-_**	**ECX25P4DAH-_**	**ECX25P8DAH-_**	**XTAE115G00D_**
Size Q									
125	115	15	—	120	150A	**ECX25Q1AAH-_**	**ECX25Q4AAH-_**	**ECX25Q8AAH-_**	**XTAE150G00A_**
	208	25	40	208		**ECX25Q1EAH-_**	**ECX25Q4EAH-_**	**ECX25Q8EAH-_**	**XTAE150G00E_**
	230	25	50	240		**ECX25Q1BAH-_**	**ECX25Q4BAH-_**	**ECX25Q8BAH-_**	**XTAE150G00B_**
	380	—	75	380/50 Hz		**ECX25Q1LAH-_**	**ECX25Q4LAH-_**	**ECX25Q8LAH-_**	**XTAE150G00L_**
	460	—	100	480		**ECX25Q1CAH-_**	**ECX25Q4CAH-_**	**ECX25Q8CAH-_**	**XTAE150G00C_**
	575	—	125	600		**ECX25Q1DAH-_**	**ECX25Q4DAH-_**	**ECX25Q8DAH-_**	**XTAE150G00D_**

Notes

① 1 hp = 0.746 kW.

② Contact factory for other voltage options.

③ Voltage is listed at 60 Hz unless otherwise noted. Other voltages available upon request.

④ Select proper "XTOB" overload amperage range as per motor FLA, see **Page V10-T3-9**.

⑤ The catalog numbers listed in the Type 4X column are for Type 4X 304-Grade stainless steel, as indicated by the **seventh** digit.
Example: ECX25M**4**AAA-_. To order Type 4X 316-Grade stainless steel, change that digit to **9**. To order Type 4 painted steel, change that digit to **3**.
To order non-metallic, change that digit to **5**. For details on these alternate enclosures, see **Tab 13**.

Class ECX26—Combination Reversing Starter—Circuit Breaker

Amps	Maximum hp ① Motor Voltage ②	Single-Phase	Three-Phase	Coil Voltage at 60 Hz ③	Circuit Breaker	Type 1/IP23 Catalog Number ④	Type 4X/IP66 ⑤ Catalog Number ④	Type 12/IP65 Catalog Number ④	Component Catalog Number ④
Size B									
7	115	1/4	—	120	7A	**ECX26B1AAC-_**	**ECX26B4AAC-_**	**ECX26B8AAC-_**	**XTAR007B10A_**
	208	3/4	1-1/2	208		**ECX26B1EAC-_**	**ECX26B4EAC-_**	**ECX26B8EAC-_**	**XTAR007B10E_**
	230	1	2	240		**ECX26B1BAC-_**	**ECX26B4BAC-_**	**ECX26B8BAC-_**	**XTAR007B10B_**
	380	—	3	380/50 Hz		**ECX26B1LAC-_**	**ECX26B4LAC-_**	**ECX26B8LAC-_**	**XTAR007B10L_**
	460	—	3	480		**ECX26B1CAC-_**	**ECX26B4CAC-_**	**ECX26B8CAC-_**	**XTAR007B10C_**
	575	—	5	600		**ECX26B1DAC-_**	**ECX26B4DAC-_**	**ECX26B8DAC-_**	**XTAR007B10D_**
Size C									
9	115	1/2	—	120	15A	**ECX26C1AAD-_**	**ECX26C4AAD-_**	**ECX26C8AAD-_**	**XTAR009B10A_**
	208	1	2	208		**ECX26C1EAD-_**	**ECX26C4EAD-_**	**ECX26C8EAD-_**	**XTAR009B10E_**
	230	1-1/2	3	240		**ECX26C1BAD-_**	**ECX26C4BAD-_**	**ECX26C8BAD-_**	**XTAR009B10B_**
	380	—	5	380/50 Hz		**ECX26C1LAD-_**	**ECX26C4LAD-_**	**ECX26C8LAD-_**	**XTAR009B10L_**
	460	—	5	480		**ECX26C1CAD-_**	**ECX26C4CAD-_**	**ECX26C8CAD-_**	**XTAR009B10C_**
	575	—	7-1/2	600		**ECX26C1DAD-_**	**ECX26C4DAD-_**	**ECX26C8DAD-_**	**XTAR009B10D_**
Size D									
12	115	1/2	—	120	15A	**ECX26D1AAD-_**	**ECX26D4AAD-_**	**ECX26D8AAD-_**	**XTAR012B10A_**
	208	1-1/2	3	208		**ECX26D1EAD-_**	**ECX26D4EAD-_**	**ECX26D8EAD-_**	**XTAR012B10E_**
	230	2	3	240		**ECX26D1BAD-_**	**ECX26D4BAD-_**	**ECX26D8BAD-_**	**XTAR012B10B_**
	380	—	5	380/50 Hz		**ECX26D1LAD-_**	**ECX26D4LAD-_**	**ECX26D8LAD-_**	**XTAR012B10L_**
	460	—	7-1/2	480		**ECX26D1CAD-_**	**ECX26D4CAD-_**	**ECX26D8CAD-_**	**XTAR012B10C_**
	575	—	10	600		**ECX26D1DAD-_**	**ECX26D4DAD-_**	**ECX26D8DAD-_**	**XTAR012B10D_**
Size E									
15	115	3/4	—	120	30A	**ECX26E1AAE-_**	**ECX26E4AAE-_**	**ECX26E8AAE-_**	**XTAR015B10A_**
	208	2	3	208		**ECX26E1EAE-_**	**ECX26E4EAE-_**	**ECX26E8EAE-_**	**XTAR015B10E_**
	230	2	3	240		**ECX26E1BAE-_**	**ECX26E4BAE-_**	**ECX26E8BAE-_**	**XTAR015B10B_**
	380	—	5	380/50 Hz		**ECX26E1LAE-_**	**ECX26E4LAE-_**	**ECX26E8LAE-_**	**XTAR015B10L_**
	460	—	7-1/2	480		**ECX26E1CAE-_**	**ECX26E4CAE-_**	**ECX26E8CAE-_**	**XTAR015B10C_**
	575	—	10	600		**ECX26E1DAE-_**	**ECX26E4DAE-_**	**ECX26E8DAE-_**	**XTAR015B10D_**
Size F									
18	115	2	—	120	30A	**ECX26F1AAE-_**	**ECX26F4AAE-_**	**ECX26F8AAE-_**	**XTAR018C10A_**
	208	2	5	208		**ECX26F1EAE-_**	**ECX26F4EAE-_**	**ECX26F8EAE-_**	**XTAR018C10E_**
	230	3	5	240		**ECX26F1BAE-_**	**ECX26F4BAE-_**	**ECX26F8BAE-_**	**XTAR018C10B_**
	380	—	7-1/2	380/50 Hz		**ECX26F1LAE-_**	**ECX26F4LAE-_**	**ECX26F8LAE-_**	**XTAR018C10L_**
	460	—	10	480		**ECX26F1CAE-_**	**ECX26F4CAE-_**	**ECX26F8CAE-_**	**XTAR018C10C_**
	575	—	15	600		**ECX26F1DAE-_**	**ECX26F4DAE-_**	**ECX26F8DAE-_**	**XTAR018C10D_**

Notes

① 1 hp = 0.746 kW.

② Contact factory for other voltage options.

③ Voltage is listed at 60 Hz unless otherwise noted. Other voltages available upon request.

④ Select proper "XTOB" overload amperage range as per motor FLA, see **Page V10-T3-9**.

⑤ The catalog numbers listed in the Type 4X column are for Type 4X 304-Grade stainless steel, as indicated by the **seventh** digit.
Example: ECX26B**4**AAA-_. To order Type 4X 316-Grade stainless steel, change that digit to **9**. To order Type 4 painted steel, change that digit to **3**.
To order non-metallic, change that digit to **5**. For details on these alternate enclosures, see **Tab 13**.

Class ECX26—Combination Reversing Starter—Circuit Breaker, continued

Amps	Maximum hp ① Motor Voltage ②	Single-Phase	Three-Phase	Coil Voltage at 60 Hz ③	Circuit Breaker	Type 1/IP23 Catalog Number ④	Type 4X/IP66 ⑤ Catalog Number ④	Type 12/IP65 Catalog Number ④	Component Catalog Number ④
Size G									
25	115	2	—	120	50A	**ECX26G1AAF-_**	**ECX26G4AAF-_**	**ECX26G8AAF-_**	**XTAR025C10A_**
	208	3	7-1/2	208		**ECX26G1EAF-_**	**ECX26G4EAF-_**	**ECX26G8EAF-_**	**XTAR025C10E_**
	230	5	7-1/2	240		**ECX26G1BAF-_**	**ECX26G4BAF-_**	**ECX26G8BAF-_**	**XTAR025C10B_**
	380	—	10	380/50 Hz		**ECX26G1LAF-_**	**ECX26G4LAF-_**	**ECX26G8LAF-_**	**XTAR025C10L_**
	460	—	15	480		**ECX26G1CAF-_**	**ECX26G4CAF-_**	**ECX26G8CAF-_**	**XTAR025C10C_**
	575	—	20	600		**ECX26G1DAF-_**	**ECX26G4DAF-_**	**ECX26G8DAF-_**	**XTAR025C10D_**
Size H									
32	115	3	—	120	50A	**ECX26H1AAF-_**	**ECX26H4AAF-_**	**ECX26H8AAF-_**	**XTAR032C10A_**
	208	5	10	208		**ECX26H1EAF-_**	**ECX26H4EAF-_**	**ECX26H8EAF-_**	**XTAR032C10E_**
	230	5	10	240		**ECX26H1BAF-_**	**ECX26H4BAF-_**	**ECX26H8BAF-_**	**XTAR032C10B_**
	380	—	15	380/50 Hz		**ECX26H1LAF-_**	**ECX26H4LAF-_**	**ECX26H8LAF-_**	**XTAR032C10L_**
	460	—	20	480		**ECX26H1CAF-_**	**ECX26H4CAF-_**	**ECX26H8CAF-_**	**XTAR032C10C_**
	575	—	25	600		**ECX26H1DAF-_**	**ECX26H4DAF-_**	**ECX26H8DAF-_**	**XTAR032C10D_**
Size J									
40	115	3	—	120	50A	**ECX26J1AAF-_**	**ECX26J4AAF-_**	**ECX26J8AAF-_**	**XTAR040D00A_**
	208	5	10	208		**ECX26J1EAF-_**	**ECX26J4EAF-_**	**ECX26J8EAF-_**	**XTAR040D00E_**
	230	7-1/2	15	240		**ECX26J1BAF-_**	**ECX26J4BAF-_**	**ECX26J8BAF-_**	**XTAR040D00B_**
	380	—	15	380/50 Hz		**ECX26J1LAF-_**	**ECX26J4LAF-_**	**ECX26J8LAF-_**	**XTAR040D00L_**
	460	—	30	480		**ECX26J1CAF-_**	**ECX26J4CAF-_**	**ECX26J8CAF-_**	**XTAR040D00C_**
	575	—	40	600		**ECX26J1DAF-_**	**ECX26J4DAF-_**	**ECX26J8DAF-_**	**XTAR040D00D_**
Size K									
50	115	3	—	120	70A	**ECX26K1AAW-_**	**ECX26K4AAW-_**	**ECX26K8AAW-_**	**XTAR050D00A_**
	208	7-1/2	15	208		**ECX26K1EAW-_**	**ECX26K4EAW-_**	**ECX26K8EAW-_**	**XTAR050D00E_**
	230	10	20	240		**ECX26K1BAW-_**	**ECX26K4BAW-_**	**ECX26K8BAW-_**	**XTAR050D00B_**
	380	—	20	380/50 Hz		**ECX26K1LAW-_**	**ECX26K4LAW-_**	**ECX26K8LAW-_**	**XTAR050D00L_**
	460	—	40	480		**ECX26K1CAW-_**	**ECX26K4CAW-_**	**ECX26K8CAW-_**	**XTAR050D00C_**
	575	—	50	600		**ECX26K1DAW-_**	**ECX26K4DAW-_**	**ECX26K8DAW-_**	**XTAR050D00D_**
Size L									
65	115	5	—	120	100A	**ECX26L1AAW-_**	**ECX26L4AAW-_**	**ECX26L8AAW-_**	**XTAR065D00A_**
	208	10	20	208		**ECX26L1EAW-_**	**ECX26L4EAW-_**	**ECX26L8EAW-_**	**XTAR065D00E_**
	230	15	25	240		**ECX26L1BAW-_**	**ECX26L4BAW-_**	**ECX26L8BAW-_**	**XTAR065D00B_**
	380	—	30	380/50 Hz		**ECX26L1LAW-_**	**ECX26L4LAW-_**	**ECX26L8LAW-_**	**XTAR065D00L_**
	460	—	50	480		**ECX26L1CAW-_**	**ECX26L4CAW-_**	**ECX26L8CAW-_**	**XTAR065D00C_**
	575	—	60	600		**ECX26L1DAW-_**	**ECX26L4DAW-_**	**ECX26L8DAW-_**	**XTAR065D00D_**

Notes

① 1 hp = 0.746 kW.

② Contact factory for other voltage options.

③ Voltage is listed at 60 Hz unless otherwise noted. Other voltages available upon request.

④ Select proper "XTOB" overload amperage range as per motor FLA, see **Page V10-T3-9**.

⑤ The catalog numbers listed in the Type 4X column are for Type 4X 304-Grade stainless steel, as indicated by the **seventh** digit.
Example: ECX26G**4**AAF-_. To order Type 4X 316-Grade stainless steel, change that digit to **9**. To order Type 4 painted steel, change that digit to **3**.
To order non-metallic, change that digit to **5**. For details on these alternate enclosures, see **Tab 13**.

Class ECX26—Combination Reversing Starter—Circuit Breaker, continued

Amps	Maximum hp ① Motor Voltage ②	Single-Phase	Three-Phase	Coil Voltage at 60 Hz ③	Circuit Breaker	Type 1/IP23 Catalog Number ④	Type 4X/IP66 ⑤ Catalog Number ④	Type 12/IP65 Catalog Number ④	Component Catalog Number ④
Size M									
80	115	7-1/2	—	120	100A	**ECX26M1AAG-_**	**ECX26M4AAG-_**	**ECX26M8AAG-_**	**XTAR080F00A_**
	208	15	25	208		**ECX26M1EAG-_**	**ECX26M4EAG-_**	**ECX26M8EAG-_**	**XTAR080F00E_**
	230	15	30	240		**ECX26M1BAG-_**	**ECX26M4BAG-_**	**ECX26M8BAG-_**	**XTAR080F00B_**
	380	—	50	380/50 Hz		**ECX26M1LAG-_**	**ECX26M4LAG-_**	**ECX26M8LAG-_**	**XTAR080F00L_**
	460	—	60	480		**ECX26M1CAG-_**	**ECX26M4CAG-_**	**ECX26M8CAG-_**	**XTAR080F00C_**
	575	—	75	600		**ECX26M1DAG-_**	**ECX26M4DAG-_**	**ECX26M8DAG-_**	**XTAR080F00D_**
Size N									
95	115	7-1/2	—	120	100A	**ECX26N1AAG-_**	**ECX26N4AAG-_**	**ECX26N8AAG-_**	**XTAR095F00A_**
	208	15	25	208		**ECX26N1EAG-_**	**ECX26N4EAG-_**	**ECX26N8EAG-_**	**XTAR095F00E_**
	230	15	40	240		**ECX26N1BAG-_**	**ECX26N4BAG-_**	**ECX26N8BAG-_**	**XTAR095F00B_**
	380	—	60	380/50 Hz		**ECX26N1LAG-_**	**ECX26N4LAG-_**	**ECX26N8LAG-_**	**XTAR095F00L_**
	460	—	75	480		**ECX26N1CAG-_**	**ECX26N4CAG-_**	**ECX26N8CAG-_**	**XTAR095F00C_**
	575	—	100	600		**ECX26N1DAG-_**	**ECX26N4DAG-_**	**ECX26N8DAG-_**	**XTAR095F00D_**
Size P									
115	115	10	—	120	150A	**ECX26P1AAH-_**	**ECX26P4AAH-_**	**ECX26P8AAH-_**	**XTAR115G00A_**
	208	25	40	208		**ECX26P1EAH-_**	**ECX26P4EAH-_**	**ECX26P8EAH-_**	**XTAR115G00E_**
	230	25	50	240		**ECX26P1BAH-_**	**ECX26P4BAH-_**	**ECX26P8BAH-_**	**XTAR115G00B_**
	380	—	60	380/50 Hz		**ECX26P1LAH-_**	**ECX26P4LAH-_**	**ECX26P8LAH-_**	**XTAR115G00L_**
	460	—	100	480		**ECX26P1CAH-_**	**ECX26P4CAH-_**	**ECX26P8CAH-_**	**XTAR115G00C_**
	575	—	125	600		**ECX26P1DAH-_**	**ECX26P4DAH-_**	**ECX26P8DAH-_**	**XTAR115G00D_**

Notes

① 1 hp = 0.746 kW.

② Contact factory for other voltage options.

③ Voltage is listed at 60 Hz unless otherwise noted. Other voltages available upon request.

④ Select proper "XTOB" overload amperage range as per motor FLA, see **Page V10-T3-9**.

⑤ The catalog numbers listed in the Type 4X column are for Type 4X 304-Grade stainless steel, as indicated by the **seventh** digit.
Example: ECX26M**4**AAG-_. To order Type 4X 316-Grade stainless steel, change that digit to **9**. To order Type 4 painted steel, change that digit to **3**.
To order non-metallic, change that digit to **5**. For details on these alternate enclosures, see **Tab 13**.

Wiring Diagrams

Typical Wiring Diagram

FVNR with Pushbutton Control

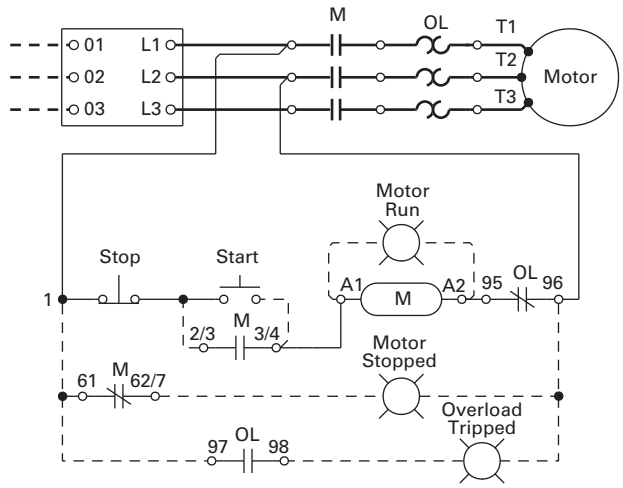

With Three-Position Selector Switch

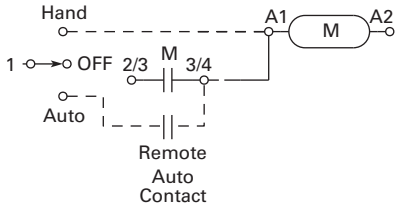

Control Power Transformer Option

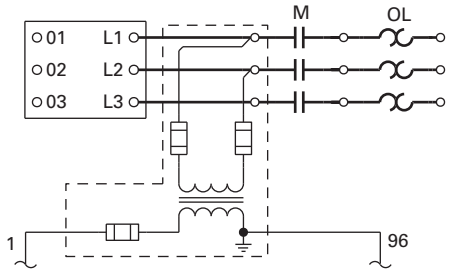

Reversing Combination Starter Wiring

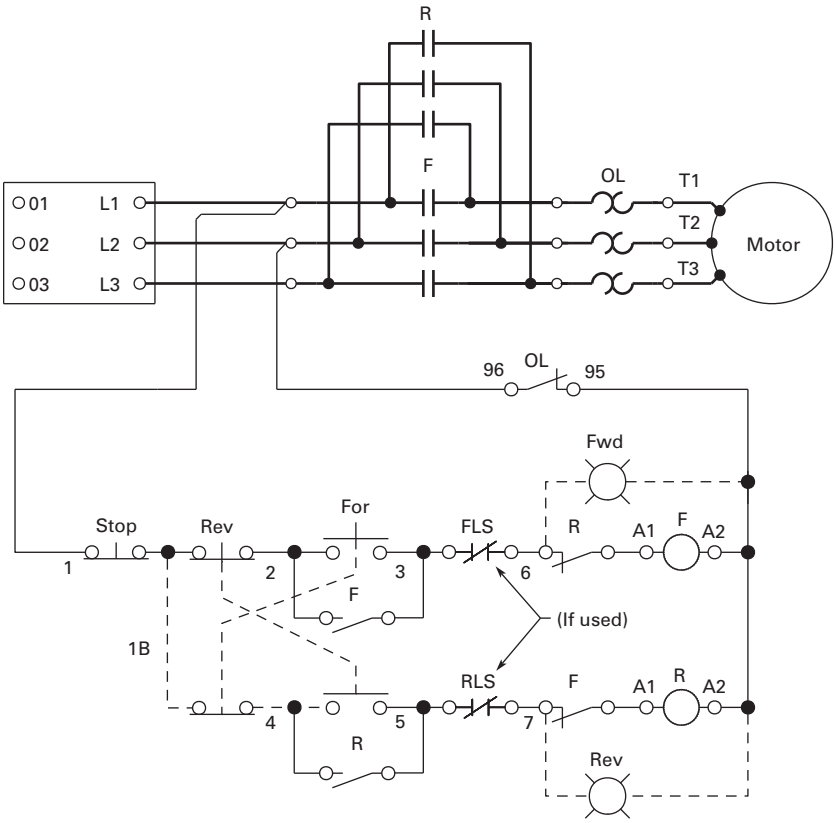

Three-Position Switch

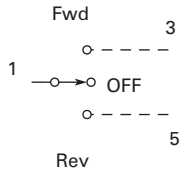

Two- and Three-Position Switch

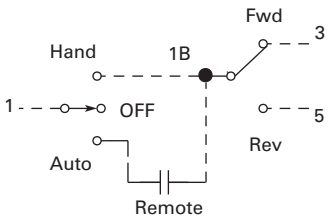

Non-Combination Starters (Non-Reversing)

Remote Pilot Devices

Two-Wire Control

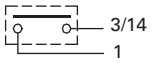

Not for Use with Auto Reset OL Relays

Three-Wire Control

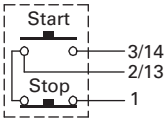

When More than One Pushbutton Station is Used, Omit Connector "A" and Connect per Sketch Below

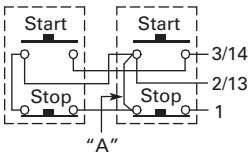

Connections for Non-Reversing Starter

Figure 1
Front View of Panel

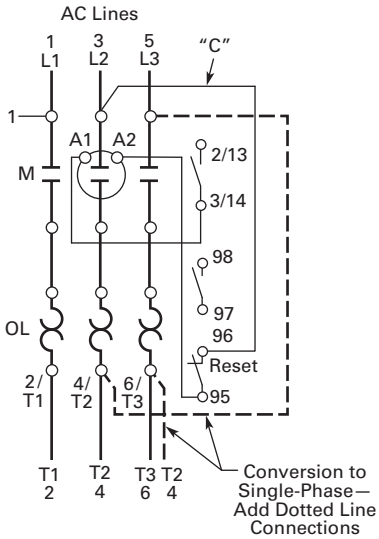

Separate Control

Remove Wire "C" if Supplied and Connect Separate Control Lines to the Number 1 Terminal on the Remote Pilot Device and to the Number 96 Terminal on the Overload Relay

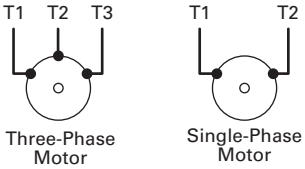

Local Control Options (If used)
Full Voltage Non-Reversing Starters

Figure A START/STOP Pushbuttons

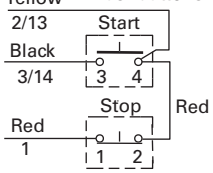

Figure B START/STOP Selector Switch

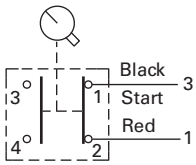

Figure C Three-Position Selector Switch

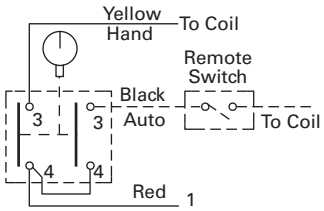

Figure D Two-Positon Selector Switch

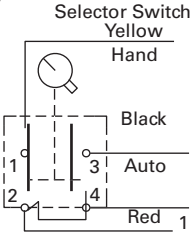

Figure E Pilot Light (Motor RUN)
Connect to Coil Terminals "A1" and "A2"

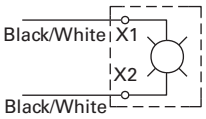

Figure G Overload Tripped

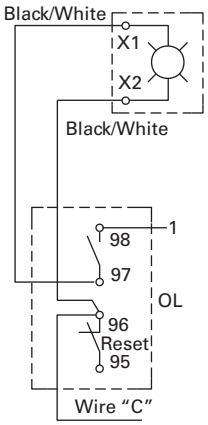

Figure F Pilot Light (Motor STOP)

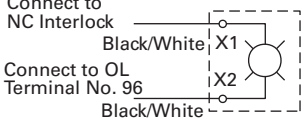

Non-Combination Starters (Reversing)

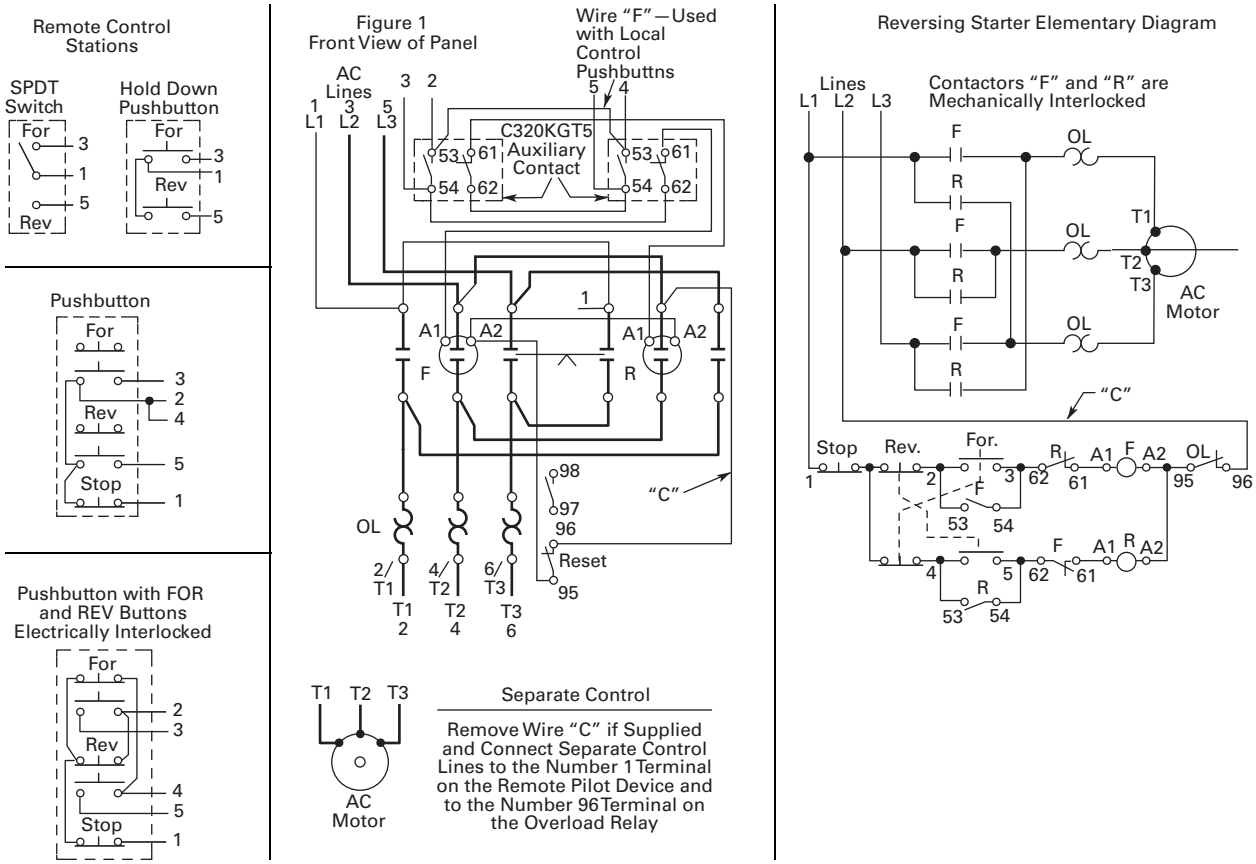

Enclosed *XT* Combination Motor Controller

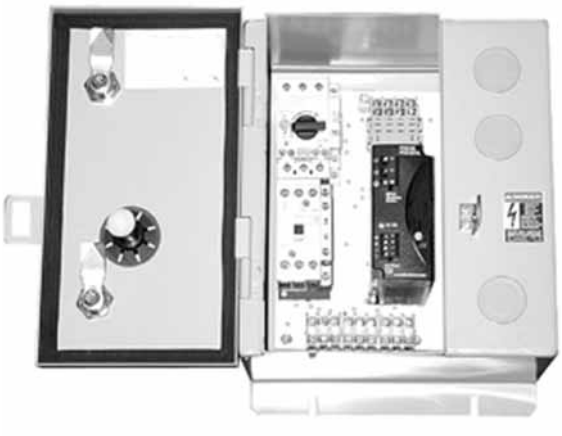

Contents

Description	*Page*
Non-Metallic Enclosure—Contactors and Starters	**V10-T3-2**
Metallic Enclosure—Contactors and Starters	**V10-T3-8**
Combination Motor Controllers	
Catalog Number Selection	**V10-T3-38**
Cover Control	**V10-T3-39**
Product Selection	
Non-Reversing Starters	**V10-T3-40**
Non-Reversing Starters with CPT	**V10-T3-40**
Reversing Starters	**V10-T3-41**

Combination Motor Controllers

Product Description

Eaton's ***XT*** line includes iec contactors, starters and combination motor controllers (CMCs). Designed to meet international standards, the enclosed control ***XT*** line (ECX), carries UL and cUL certifications.

Features and Benefits

- ON/OFF rotary handle with lockout provision
- Visible trip indication
- Test trip function
- Motor applications from 0.11A to 32A
- Class 10 overload protection
- Built-in heater and magnetic trip elements to protect the motor
- Phase loss sensitivity
- Type 2 coordination
- Ambient compensated up to 55°C [140°F]
- Control inputs located at front of starter for easy access and wiring
- Wide range of coils
- DIN rail mount—XTSC…BB_
- Mounting plates—XTSC…BC_, XTSC…D motor controllers
- Adjustment dial for setting motor FLA
- Short-circuit trip at 14 times the maximum setting of the FLA adjustment dial
- UL 508 Type F CMC high fault short-circuit ratings; refer to manual motor protectors in **CA08102001E**
- Non-metallic and metallic enclosures in Types 1 (IP23), 4 (IP66), 4X (IP66) and 12 (IP65)
- Opaque (standard) or clear covers available on non-metallic Halyester enclosure

Standards and Certifications

Note: See **Tab 17** for additional information on standards and certifications that apply to all enclosed control products.

- UL Listed
- cUL Listed (indicates appropriate CSA Standard investigation)

Short-Circuit Ratings

- 0–12A/B-frame MMP with B-frame contactor
  - 50K AIC at 600V
- 13–32A/B-frame MMP with C-frame contactor
  - 18K AIC at 600V

Additional Reference

Cover Control	**V10-T3-10**
Dimensions	**Tab 14**
Accessories and Modifications	**Tab 15**
Renewal Parts	**Tab 16**
Technical Data and Specifications	**Tab 17**

Catalog Number Selection

Combination Motor Controllers—Enclosed Control

EC X 76 D 4 B A A - __ __

Design
X = *XT* IEC

Class	Page
76 = Combination motor controller (CMC)—non-reversing starter	**V10-T3-40**
77 = Combination motor controller (CMC)—non-reversing starter with CPT	**V10-T3-40**
78 = Combination motor controller (CMC)—reversing starter	**V10-T3-41**

Size
D = 12A
H = 32A

Enclosure Type/IP Ratings ①
1 = Type 1—General purpose/IP23
3 = Type 4—Painted steel/IP66
4 = Type 4X—Watertight (304-Grade stainless steel)/IP66
5 = Type 4X—Watertight (non-metallic)/IP66
8 = Type 12—Dust-tight/IP65

Coil Voltage
A = 120V
B = 240V
C = 480V
D = 600V
E = 208V
L = 380V/50 Hz

Cover Control
See **Page V10-T3-39**

Disconnect Ratings
A = None

MMP Overload Range
See table below

Modification Codes
See **Tab 15**

XTPR MMP Amperage Ranges

XT MMP Catalog Number	Overload Amp Range	Enclosed Control Suffix Code
Frame B Rotary MMP		
XTPRP16BC1	0.1–0.16	**A**
XTPRP25BC1	0.16–0.25	**B**
XTPRP40BC1	0.25–0.4	**C**
XTPRP63BC1	0.4–0.63	**D**
XTPR001BC1	0.63–1	**E**
XTPR1P6BC1	1–1.6	**F**
XTPR2P5BC1	1.6–2.5	**G**
XTPR004BC1	2.5–4	**H**
XTPR6P3BC1	4–6.3	**J**
XTPR010BC1	6.3–10	**K**
XTPR012BC1	8–12.0	**L**
XTPR016BC1	10–16.0	**M**
XTPR020BC1	16–20	**N**
XTPR025BC1	20–25	**Q**
XTPR032BC1	25–32	**R**

Note
① See **Tab 1** for enclosure type/IP rating cross-reference.

Cover Control

- Cover control for combination motor control starters uses the 10250T (30 mm) family
- Selector switches are maintained with lever operators
- Pushbuttons are momentary type with extended pushbutton
- The kit includes hardware and connecting wires (where possible)
- For factory installed control devices other than shown below, refer to modification codes, **Tab 15**

Product Selection

10250T Style Combination Cover Control

Description	Factory Installed Flange Control Position 9 Alpha	Field Installation Kits Combination Catalog Number
Non-Reversing		
No cover mounted pilot devices	**A**	—
START/STOP pushbuttons	**B**	**C400T1**
With red RUN pilot light	**C**	—
With red RUN/green OFF lights	**D**	—
ON/OFF pushbuttons	**E**	**C400T2**
With red RUN pilot light	**F**	—
With red RUN/green OFF lights	**G**	—
HAND/OFF/AUTO selector switch	**H**	**C400T12**
With red RUN pilot light	**J**	—
With red RUN/green OFF lights	**K**	—
START pushbutton	**L**	**C400T3**
ON pushbutton	**M**	**C400T4**
OFF pushbutton	**N**	**C400T5**
Red RUN pilot light	**P**	**C400T9** ①
Green OFF	**Q**	**C400T10** ①
Red RUN/green OFF pilot lights	**R**	**C400T11** ①
START/STOP selector switch	**S**	**C400T13**
With red RUN pilot light	**T**	—
With red RUN/green OFF lights	**U**	—
ON/OFF selector switch	**V**	**C400T14**
With red RUN pilot light	**W**	—
With red RUN/green OFF lights	**X**	—

Description	Factory Installed Flange Control Position 9 Alpha	Field Installation Kits Combination Catalog Number
Reversing		
No cover mounted pilot devices	**A**	—
FOR/REV/STOP pushbuttons	**B**	**C400T6**
With two red pilot lights	**C**	—
With two red/one green pilot lights	**D**	—
UP/STOP/DOWN pushbuttons	**E**	—
With two red pilot lights	**F**	—
FOR/OFF/REV selector switch	**H**	**C400T15**
With two red pilot lights	**J**	—
With two red/one green pilot lights	**K**	—
Two red pilot lights	**P**	②
One green pilot light	**Q**	**C400T10** ①
Two red/one green pilot lights	**R**	—
OPEN/OFF/CLOSE selector switch	**V**	**C400T16**
With two red pilot lights	**W**	—
With two red/one green pilot lights	**X**	—

Notes

① Add code letter from the table below to catalog number for voltage—kits only. Example: C400T9**B**.

Rating	Code Letter	Rating	Code Letter	Rating	Code Letter
120V 60 Hz	**A**	240V 60 Hz	**B**	480V 60 Hz	**C**
208V 60 Hz	**E**	380V 50 Hz	**L**	600V 60 Hz	**D**

② Order quantity (2) of **C400T10**.

Product Selection

Non-Reversing Starters

Class ECX76—Combination Motor Controller (CMC)—Non-Reversing Starter

Amps	Maximum hp ① Motor Voltage	Single-Phase	Three-Phase	Coil Voltage at 60 Hz ②	Type 1/IP23 General Purpose Catalog Number	Type 4X/IP66 ③④ Watertight Catalog Number	Type 4X Non-Metallic/IP66 Watertight ④ Catalog Number	Type 12/IP65 Dust-Tight Catalog Number	Component ⑤ Catalog Number
Size D									
12	115	1/2	—	120	**ECX76D1AAA-_**	**ECX76D4AAA-_**	**ECX76D5AAA-_**	**ECX76D8AAA-_**	**XTPR_ _ _BC1**
	208	1-1/2	3	208	**ECX76D1EAA-_**	**ECX76D4EAA-_**	**ECX76D5EAA-_**	**ECX76D8EAA-_**	
	230	2	3	240	**ECX76D1BAA-_**	**ECX76D4BAA-_**	**ECX76D5BAA-_**	**ECX76D8BAA-_**	
	380	—	5	380/50 Hz	**ECX76D1LAA-_**	**ECX76D4LAA-_**	**ECX76D5LAA-_**	**ECX76D8LAA-_**	
	460	—	7-1/2	480	**ECX76D1CAA-_**	**ECX76D4CAA-_**	**ECX76D5CAA-_**	**ECX76D8CAA-_**	
	575	—	10	600	**ECX76D1DAA-_**	**ECX76D4DAA-_**	**ECX76D5DAA-_**	**ECX76D8DAA-_**	
Size H									
32	115	3	—	120	**ECX76H1AAA-_**	**ECX76H4AAA-_**	**ECX76H5AAA-_**	**ECX76H8AAA-_**	**XTPR_ _ _BC1**
	208	5	10	208	**ECX76H1EAA-_**	**ECX76H4EAA-_**	**ECX76H5EAA-_**	**ECX76H8EAA-_**	
	230	5	10	240	**ECX76H1BAA-_**	**ECX76H4BAA-_**	**ECX76H5BAA-_**	**ECX76H8BAA-_**	
	380	—	15	380/50 Hz	**ECX76H1LAA-_**	**ECX76H4LAA-_**	**ECX76H5LAA-_**	**ECX76H8LAA-_**	
	460	—	20	480	**ECX76H1CAA-_**	**ECX76H4CAA-_**	**ECX76H5CAA-_**	**ECX76H8CAA-_**	
	575	—	25	600	**ECX76H1DAA-_**	**ECX76H4DAA-_**	**ECX76H5DAA-_**	**ECX76H8DAA-_**	

Non-Reversing Starters with CPT

Class ECX77—Combination Motor Controller (CMC)—Non-Reversing Starter with CPT

Amps	Maximum hp ① Motor Voltage	Single-Phase	Three-Phase	Coil Voltage at 60 Hz ②	Type 1/IP23 General Purpose Catalog Number	Type 4X/IP66 ③④ Watertight Catalog Number	Type 4X Non-Metallic/IP66 Watertight ④ Catalog Number	Type 12/IP65 Dust-Tight Catalog Number	Component ⑤ Catalog Number
Size D									
12	115	1/2	—	120	**ECX77D1AAA-_**	**ECX77D4AAA-_**	**ECX77D5AAA-_**	**ECX77D8AAA-_**	**XTPR_ _ _BC1**
	208	1-1/2	3	208	**ECX77D1EAA-_**	**ECX77D4EAA-_**	**ECX77D5EAA-_**	**ECX77D8EAA-_**	
	230	2	3	240	**ECX77D1BAA-_**	**ECX77D4BAA-_**	**ECX77D5BAA-_**	**ECX77D8BAA-_**	
	380	—	5	380/50 Hz	**ECX77D1LAA-_**	**ECX77D4LAA-_**	**ECX77D5LAA-_**	**ECX77D8LAA-_**	
	460	—	7-1/2	480	**ECX77D1CAA-_**	**ECX77D4CAA-_**	**ECX77D5CAA-_**	**ECX77D8CAA-_**	
	575	—	10	600	**ECX77D1DAA-_**	**ECX77D4DAA-_**	**ECX77D5DAA-_**	**ECX77D8DAA-_**	
Size H									
32	115	3	—	120	**ECX77H1AAA-_**	**ECX77H4AAA-_**	**ECX77H5AAA-_**	**ECX77H8AAA-_**	**XTPR_ _ _BC1**
	208	5	10	208	**ECX77H1EAA-_**	**ECX77H4EAA-_**	**ECX77H5EAA-_**	**ECX77H8EAA-_**	
	230	5	10	240	**ECX77H1BAA-_**	**ECX77H4BAA-_**	**ECX77H5BAA-_**	**ECX77H8BAA-_**	
	380	—	15	380/50 Hz	**ECX77H1LAA-_**	**ECX77H4LAA-_**	**ECX77H5LAA-_**	**ECX77H8LAA-_**	
	460	—	20	480	**ECX77H1CAA-_**	**ECX77H4CAA-_**	**ECX77H5CAA-_**	**ECX77H8CAA-_**	
	575	—	25	600	**ECX77H1DAA-_**	**ECX77H4DAA-_**	**ECX77H5DAA-_**	**ECX77H8DAA-_**	

Notes

① 1 hp = 0.746 kW.

② Voltage is listed at 60 Hz unless otherwise noted. Other voltages available upon request.

③ The catalog numbers listed in the Type 4X column are for Type 4X 304-Grade stainless steel, as indicated by the **seventh** digit. Example: ECX76D**5**AAA-_. To order Type 4 painted steel, change that digit to **3**.

④ Handle mechanism is rated Type 1 or 12. Contact local sales office for availability of Type 4X versions.

⑤ Select proper "XTPR" MMP overload amperage range as per motor FLA, see **Page V10-T3-38**.

Reversing Starters

Class ECX78—Combination Motor Controller (CMC)—Reversing Starter

Amps	Maximum hp ① Motor Voltage	Single-phase	Three-phase	Coil Voltage at 60 Hz ②	Type 1/IP23 General Purpose Catalog Number	Type 4X/IP66 ③④ Watertight Catalog Number	Type 4X Non-Metallic/IP66 Watertight ④ Catalog Number	Type 12/IP65 Dust-Tight Catalog Number	Component ⑤ Catalog Number
Size D									
12	115	1/2	—	120	**ECX78D1AAA-_**	**ECX78D4AAA-_**	**ECX78D5AAA-_**	**ECX78D8AAA-_**	**XTPR_ _ _BC1**
	208	1-1/2	3	208	**ECX78D1EAA-_**	**ECX78D4EAA-_**	**ECX78D5EAA-_**	**ECX78D8EAA-_**	
	230	2	3	240	**ECX78D1BAA-_**	**ECX78D4BAA-_**	**ECX78D5BAA-_**	**ECX78D8BAA-_**	
	380	—	5	380/50 Hz	**ECX78D1LAA-_**	**ECX78D4LAA-_**	**ECX78D5LAA-_**	**ECX78D8LAA-_**	
	460	—	7-1/2	480	**ECX78D1CAA-_**	**ECX78D4CAA-_**	**ECX78D5CAA-_**	**ECX78D8CAA-_**	
	575	—	10	600	**ECX78D1DAA-_**	**ECX78D4DAA-_**	**ECX78D5DAA-_**	**ECX78D8DAA-_**	
Size H									
32	115	3	—	120	**ECX78H1AAA-_**	**ECX78H4AAA-_**	**ECX78H5AAA-_**	**ECX78H8AAA-_**	**XTPR_ _ _BC1**
	208	5	10	208	**ECX78H1EAA-_**	**ECX78H4EAA-_**	**ECX78H5EAA-_**	**ECX78H8EAA-_**	
	230	5	10	240	**ECX78H1BAA-_**	**ECX78H4BAA-_**	**ECX78H5BAA-_**	**ECX78H8BAA-_**	
	380	—	15	380/50 Hz	**ECX78H1LAA-_**	**ECX78H4LAA-_**	**ECX78H5LAA-_**	**ECX78H8LAA-_**	
	460	—	20	480	**ECX78H1CAA-_**	**ECX78H4CAA-_**	**ECX78H5CAA-_**	**ECX78H8CAA-_**	
	575	—	25	600	**ECX78H1DAA-_**	**ECX78H4DAA-_**	**ECX78H5DAA-_**	**ECX78H8DAA-_**	

Notes

① 1 hp = 0.746 kW.

② Voltage is listed at 60 Hz unless otherwise noted. Other voltages available upon request.

③ The catalog numbers listed in the Type 4X column are for Type 4X 304-Grade stainless steel, as indicated by the **seventh** digit. Example: ECX78D**5**AAA-_. To order Type 4 painted steel, change that digit to **3**.

④ Handle mechanism is rated Type 1 or 12. Contact local sales office for availability of Type 4X versions.

⑤ Select proper "XTPR" MMP overload amperage range as per motor FLA, see **Page V10-T3-38**.