Eaton Grid-Tied Solar Inverter (3.8–7 kW)

Solar-Ready Loadcenter and Meter Breaker

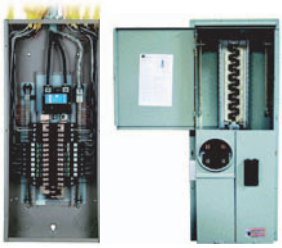

Residential Electric Vehicle Charging

1.1 Eaton Grid-Tied Solar Inverter (3.8–7 kW)

Product Overview V15-T1-2
Features and Benefits V15-T1-2
Application Description V15-T1-2
Standards and Certifications V15-T1-2
Product Selection/Technical Data and Specifications V15-T1-3

1.2 Solar-Ready Loadcenters and Meter Breakers

Product Description. V15-T1-4
Application Description V15-T1-4
Features. V15-T1-5
Standards and Certifications V15-T1-5
Product Selection V15-T1-6
Additional Information V15-T1-7

1.3 Residential Electric Vehicle Charging

Charging Stations V15-T1-8
Level 1 Universal Receptacle V15-T1-10
Level 1 Charging Station V15-T1-12
Level 2 Charging Station V15-T1-15
Electric Vehicle Simulator V15-T1-18
Electric Vehicle Charging Station Pedestal V15-T1-20

1.1 Eaton Grid-Tied Solar Inverter (3.8–7 kW)

Eaton Grid-Tied Solar Inverter (3.8–7 kW)

Contents

Description	*Page*
Eaton Grid-Tied Solar Inverter (3.8–7 kW)	
Product Selection/Technical Data and Specifications	**V15-T1-3**

Product Overview

The Eaton Grid-Tied Solar Inverter's breakthrough technology and features deliver maximum return on investment for consumers. Eaton solar inverter units offer the highest efficiency and voltage operating ranges available in order to maximize energy yield.

Installation time and costs are greatly reduced through packaging the combiner box, AC/DC disconnects and wire raceway with the inverter. The design also simplifies service on the unit through a two-piece modular configuration, which allows the wiring box to remain connected and mounted if the need ever arises to replace the power module.

Features and Benefits

Ratings

- 3800W, 4000W, 5000W, 6000W, 7000W

Maximum Energy Harvest

- 97% CEC efficiency
- Broad voltage operating range (105–500 Vdc) for superior performance in low light and high temperature environments
- Transformerless design

Saves Installation Time and Cost

- Integrated PV system AC/DC disconnect switch
- Four branch circuit–rated negative and positive fused inputs
- Integrated NEC®-compliant wire raceway

Versatility in Installation

- Field-selectable voltage output: 208/240/277 Vac
- LCD display with side pushbutton for nighttime monitoring
- NEMA® 3R enclosure
- Two-piece modular design

Eaton Value

- A global leader in inverter technology
- Complete balance of system provider
- Eaton reputation for quality, support, and service
- Installation certification via Eaton Certified Contractor Network (ECCN)

Application Description

Available in four individual sizes: 4 kW, 5 kW, 6 kW and 7 kW respectively. The 4 kW unit has the ability to be field-converted to output 3.8 kW to accommodate lower rated AC loadcenters. This inverter family is to be used in grid-tied applications only, thus having the ability to feed power to the utility grid. The design focus of these residential/light commercial inverters was on maximizing energy harvest and minimizing installation time and cost. The inverters boast an extremely high efficiency and a wide DC voltage operating range, while fully integrating the complete balance of system into the unit, including a four-string DC combiner, a DC disconnect switch, an AC disconnect switch and a wire raceway.

Standards and Certifications

- ETL Listed (in compliance with UL® Std 1741)
- CSA® Listed (Std C22.2 No. 107.1)
- CEC Listed

Product Selection/Technical Data and Specifications

Eaton Grid-Tied Solar Inverter (3.8–7 kW)

Description	PV240		PV250	PV260	PV270
Input (DC)					
Nominal DC voltage	360V		360V	360V	360V
Maximum DC voltage	600V		600V	600V	600V
System startup voltage	150V		150V	150V	150V
Shutdown voltage	Typical 80V		Typical 80V	Typical 80V	Typical 80V
MPPT voltage range	105–500V		105–500V	105–500V	105–500V
Full rating voltage range	225–500V		200–500V	200–500V	200–500V
Maximum DC current	19A		26A	32A	37A
Number of DC input terminals	4		4	4	4
Output (AC)					
Nominal AC power at 240 Vac and 277 Vac	3800W	4000W	5000W	6000W	7000W
Nominal AC power at 208 Vac	3800W	3800W	4600W	6000W	7000W
Maximum AC power at 240 Vac and 277 Vac	3800W	4000W	5000W	6000W	7000W
Maximum AC power at 208 Vac	3800W	3800W	4600W	6000W	7000W
Nominal AC voltage	208V/240V/277V		208V/240V/277V	208V/240V/277V	208V/240V/277V
Nominal frequency	60 Hz		60 Hz	60 Hz	60 Hz
Disconnection time of excess operational frequency range	<0.16 sec		<0.16 sec	<0.16 sec	<0.16 sec
Nominal AC current at 208 Vac	18.3A	18.3A	22.1A	28.9A	33.7A
Nominal AC current at 240 Vac	15.8A	16.7A	20.8A	25.0A	29.2A
Nominal AC current at 277 Vac	13.7A	14.4A	18.1A	21.7A	25.3A
Maximum AC current at 208 Vac	18.3A	18.5A	22.5A	30.0A	35.0A
Maximum AC current at 240 Vac	15.8A	18.5A	22.5A	28.5A	33.2A
Maximum AC current at 277 Vac	13.7A	16.4A	20.5A	24.6A	28.7A
Power factor	> 0.99		> 0.99	> 0.99	> 0.99
Efficiency					
Peak efficiency	97.50%		97.50%	97.50%	97.50%
CEC efficiency	97%		97%	97%	97%
General Data					
Topology	Transformerless		Transformerless	Transformerless	Transformerless
Dimensions (W/H/D) inches	17.1/33.3/8.3		17.1/33.3/8.3	17.1/33.3/8.3	17.1/33.3/8.3
Weight (lbs)	86		90	101	101
Power consumption: standby/night	< 7W/< 0.2W		< 7W/< 0.2W	< 7W/< 0.2W	< 7W/< 0.2W
DC insulation resistance	> 4M ohms		> 4M ohms	> 4M ohms	> 4M ohms
Enclosure	NEMA 3R		NEMA 3R	NEMA 3R	NEMA 3R
Heat dissipation	Force air cooling, variable fan speed according to temperature on heat sink				
Operating temperature range	–25 to +50°C		–25 to +50°C	–25 to +50°C	–25 to +50°C
Humidity	0 to 95%, noncondensing		0 to 95%, noncondensing	0 to 95%, noncondensing	0 to 95%, noncondensing
Communication	RS-232/Super-485		RS-232/Super-485	RS-232/Super-485	RS-232/Super-485
Ground fault protection	Internal GFCI and Isolation detection function, in accordance with UL 1741				
Disconnect	Integrated AC and DC switch		Integrated AC and DC switch	Integrated AC and DC switch	Integrated AC and DC switch
Certifications	ETL (in compliance with UL 1741), CSA, CEC				
DC surge protection	4 kV		4 kV	4 kV	4 kV
AC surge protection	6 kV		6 kV	6 kV	6 kV

Solar-Ready Loadcenter and Meter Breaker

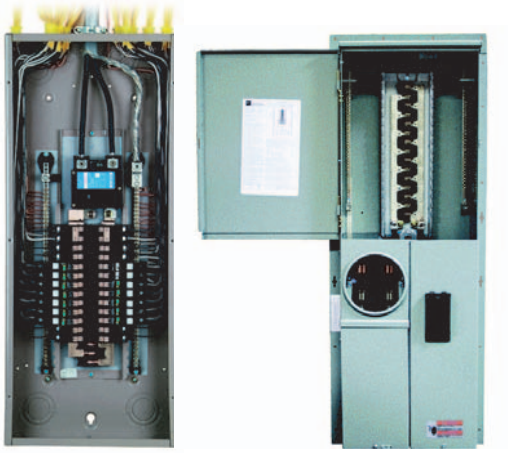

Contents

Description	*Page*
Solar-Ready Loadcenters and Meter Breakers	
Features	**V15-T1-5**
Standards and Certifications	**V15-T1-5**
Product Selection	**V15-T1-6**
Additional Information	**V15-T1-7**

Solar-Ready Loadcenters and Meter Breakers

Product Description

Loadcenters are enclosures specifically designed to house the branch circuit breakers and wiring required to distribute power to individual circuits. They contain either a main breaker when used at the service entrance point or a main lug when used as a sub-panel to add circuits to existing service. The main breaker protects the entire panel and can be used as a service disconnect. The branch breakers protect the wires leading to individual electrical loads such as fixtures and outlets.

Meter breakers are service entrance equipment that consist of a single meter socket and loadcenter (circuit breaker distribution section) or meter socket and main breaker combined in one enclosure. Sometimes called Combos, All-in-Ones, Meter Centers or Meter Mains, these units are increasing in popularity as the socket and loadcenter or main breaker are located in one location, thus providing the contractor with a labor and material savings when installing.

Eaton's solar-ready loadcenters and meter breakers can be applied as a system component of a complete photovoltaic electrical system. This solution complies with National Electrical Code® (2008) Section 690.64(B)/ (2011) Section 705.12(D), which identifies the acceptable methods for Solar Photovoltaic (PV) systems.

Application Description

In addition to residential installations, meter breakers are equally applicable for rural service entrance, mobile homes and construction site temporary power. Meter breakers are most often sold in the western, southwestern and southeastern United States. The popularity of meter breakers is continuing to increase as more utilities deregulate and pass the responsibility of supplying watthour meter sockets on to the electrical contractor.

Application Considerations

Eaton offers products for multiple applications:

- Non-EUSERC
- EUSERC/West Coast

How to Size a Solar-Ready Loadcenter or Meter Breaker for your Solar Application

The National Electrical Code (2008) Section 690.64(B)(2)/ (2011) Section 705.12(D)(2) states: "The sum of the ampere ratings of overcurrent devices in circuits supplying power to a busbar or conductor shall not exceed 120 percent of the rating of the busbar or conductor."

Note: Check with local utility for exact requirements.

Example: A 200A main breaker loadcenter + a backfed 40A PV breaker = 240A = 120% of the 200A busbar rating.

Panel Main Breaker Ampere Rating	Standard Bus Ampere Rating	Maximum Total Ampere Rating ALL PV Backfed Mains	Maximum Ampere Rating of Panel Mains + PV Mains
200	200	40	240
200	225	70	270
400	400	80	480

Features

Loadcenters and Meter Breakers

- Up to 225A rated copper or aluminum bussing maximizes solar source up to 70A
- Up to 225A factory installed main available, which provides additional flexibility in service sizing
- Commercial grade rated main breaker ensures many years of safe and dependable service
- All metal backpan provides positive, reliable breaker mounting on a stable one-piece design
- Optional installed surge protective device to protect sensitive connected loads, such as central air/furnace, range tops, televisions, computers and other critical devices

Loadcenters

- Extra 1.5-inch (38.1 mm) knockout for bundling enables easier installation
- Commercial grade 35kAIC series rated main breaker, the highest in the industry
- Drywall marking on enclosure indicates proper mounting depth for flush applications
- Unique sandalwood finish is esthetically appealing with scratch-resistant powder coating
- Silver flash plated copper bus provides superior conductivity
- Patented stab design provides a tight connection to the bus
- Top or bottom feed
  - Straight-in wiring saves labor and material
  - Only one panel for either application—no modifications necessary
- Inboard neutral
  - Provides direct neutral connection for breaker
  - Ample additional 2/0 lugs provided—no kits necessary
- Limited Lifetime Warranty for Type CH

Meter Breakers

- Meter socket and loadcenter are located in one enclosure, which provides labor and material savings
- Commercial grade 22 kAIC or 35 kAIC series rated main breaker
- 7-inch design—ideal for stucco homes
- Endwall knockouts are easily accessible for future wiring without damaging stucco
- Provision for plug-in hybrid electrical vehicle receptacle, which is an energy savings provision that allows for current/ future vehicle charging station
- Optional GFCI integral receptacle kits will constantly monitor electricity flowing in a circuit, to sense any loss of current. If the current flowing through the circuit differs by a small amount from that returning, the GFCI quickly switches off power to that circuit
- Limited Lifetime Warranty for Type CH, 10-year Warranty for Type BR

Standards and Certifications

- National Electrical Code (2008) (2008) Section 690.64(B)/ (2011) Section 705.12(D)

1

Product Selection

Solar-Ready Loadcenters

Main Breaker Ampere Rating ①	Wire Size Range	Bus Rating	Maximum Number of Spaces	Maximum Number of Circuits	Enclosure Type	Box Size	Catalog Number ②
200	#2–300 kcmil	225A	32	32	Indoor	J	**CH32BPN200JPV**
200	#2–300 kcmil	225A	42	42	Indoor	K	**CH42BPN200KPV**
200	#2–300 kcmil	225A	60	120	Indoor	N	**CH60BPN200NPV**

Type CH Solar-Ready Meter Breakers ①③

Main Breaker Ampere Rating	Bussing Ampere Rating	Mounting	Service Design	Circuits	Catalog Number
175	225	Surface	UG	42	**CMBE4242B200BS7**
200	225	Surface	OH	24	**CMBE24B200TSR**
200	225	Semi-flush	OH	24	**CMBE24B200TFR**
200	225	Semi-flush	UG	32/42	**CMBE3242B200BF**
200	225	Surface	UG	32/42	**CMBE3242B200BS**
200	225	Flush	OH	24	**CMBE24B200TFR**
200	225	Surface	OH	24	**CMBE24B200TSR**
200	225	Surface	UG	32	**CMBE3242B225BS2**
200	225	Flush	UG	32	**CMBE3242B225BF2**
200	225	Surface	UG	42	**CMBE4242B200BS2**
200	225	Surface	UG	42/42	**CMBE4242B225BS2**
320/400	PV input rated up to 20A via secondary main	Surface	UG	32/42	**CG403242SH**

Type BR Solar-Ready Meter Breakers ①③

Main Breaker Ampere Rating	Bussing Ampere Rating	Mounting	Service Design	Circuits	Catalog Number
125	225	Flush	UG/OH	20/40	**MBE2040B225BTF1**
125	225	Surface	UG/OH	20/40	**MBE2040B225BTS1**
150	225	Flush	UG/OH	20/40	**MBE2040B225BTF5**
150	225	Surface	UG/OH	20/40	**MBE2040B225BTS5**
150	225	Semi-flush	UG	30/42	**MBE3042B225BF5**
150	225	Surface	UG	30/42	**MBE3042B225BS5**
150	225	Flush	UG/OH	40	**MBE4040B200BTF5**
150	225	Surface	UG/OH	40	**MBE4040B200BTS5**
175	225	Flush	UG/OH	20/40	**MBE2040B225BTF7**
175	225	Surface	UG/OH	20/40	**MBE2040B225BTS7**
200	225	Flush	UG/OH	20/40	**MBE2040B225BTF2**
200	225	Surface	UG/OH	20/40	**MBE2040B225BTS2**
200	225	Semi-flush	UG	30	**MBED3042B200PV**
200	225	Semi-flush	UG	30/42	**MBE3042B225BF2**
200	225	Surface	UG	30/42	**MBE3042B225BS2**
200	225	Surface	UG/OH	40	**MBE4040B200BTS2**
200	225	Flush	UG/OH	40	**MBE4040B200BTF2**
225	225	Semi-flush	UG	30	**MBED3042B225PV**

Notes

① 35 kAIC main breaker Type CSH.
② Loadcenter cover is included.
③ 22 kAIC main breaker Type BWH or Type CSR.

Contact the Eaton Flex Center (1-800-330-6479 or flexcenterlincoln@eaton.com) for additional solar features including different main breakers or bus ratings.

Additional Information

Loadcenter and accessories—reference **Volume 1—Residential and Light Commercial**, CA08100002E, Tab 1.

Meter breaker and accessories—reference **Volume 1—Residential and Light Commercial**, CA08100002E, Tab 1.

Contents

Description	*Page*
Charging Stations	
Product Overview	**V15-T1-9**
Level 1 Universal Receptacle	**V15-T1-10**
Level 1 Charging Station	**V15-T1-12**
Level 2 Charging Station	**V15-T1-15**
Electric Vehicle Simulator	**V15-T1-18**
Electric Vehicle Charging Station Pedestal	**V15-T1-20**

Charging Stations

Product Description

Eaton's established excellence in both the automotive and electrical distribution/control industries have created a perfect platform for all electrical vehicle charging needs. Whether it's a residential system, a commercial endeavor or a system to support fleet electric vehicles, Eaton has the products and the depth of experience to support, install and service electric vehicle chargers.

Features

- Eaton has been managing power systems (electrical, fluid, and air) for over 100 years
- Eaton is a Tier 1 Automotive Supplier. This connectivity with the major automotives enables Eaton to be on the forefront of emerging vehicle technologies
- Turnkey installation solutions through Eaton Engineering Services (EES) and Eaton Certified Contractor Network (ECCN) throughout the United States and Canada
- Eaton is the only provider of a full family of electric vehicle charging products
- Eaton provides a one stop solution for all your electrical distribution needs
- Restricted accessibility options such as credit card and radio frequency identification (RFID)

Product Overview

Vehicle Chargers

Description	Level 1 Universal Receptacle	Level 1 Charging Station	Level 2 Charging Station	Electric Vehicle Simulator
Input voltage	110/120 Vac	110/120 Vac	208/240 Vac	—
Input amperage	20A, 40A or 80A (1–4 vehicles)	16A	16A or 30A	—
Max power	Up to 1.9W at 16A per connection	1.9 kW (L116 style)	3.8 kW (L216 style) 7.2 kW (L230 style)	—
Mount	Pedestal/bollard	Wallmount or pedestal	Wallmount or pedestal	—
Safety specifications	UL 2594 for EV use cUL 2594 for EV use	ETL Listed to UL 2594/2231/1998 cETL Listed	ETL Listed to UL 2594/2231/1998 cETL Listed	—
Enclosure	NEMA 3R stainless steel	NEMA 3R stainless steel	NEMA 3R stainless steel	—
Quick and easy installation	■	■	■	—
Ground fault protection	Yes	Yes	Yes	—
Over-current protection	Yes	Yes	Yes	—
Features	1-4 multi-vehicle support Integrated high-efficiency LED lighting Build-to-order customization available	SAE J1772™ compliant Permanent or cord-and-plug wallmount Quick and easy installation Build-to-order customization available	SAE J1772 compliant Permanent or cord-and-plug wallmount Quick and easy installation Build-to-order customization available	—
Options	Utility grade, sub-metering, access control	High-efficiency, LED site-lighting, sub-metering	High-efficiency, LED site-lighting, sub-metering	—
Applications/markets	Single and multi-family homes, parking garages, university campuses, truck stops, restaurants, airports, municipalities, shopping centers, corporate offices, hotels	Single and multi-family homes, real estate developers, builders, military bases, government city centers, schools, small offices	Single and multi-family homes, real estate developers, builders, government city centers, schools, small offices	—
Charge time	◔	◔	◑	—

Level 1 Universal Receptacle

Contents

Description	*Page*
Charging Stations	**V15-T1-8**
Level 1 Universal Receptacle	
Product Selection	**V15-T1-11**
Technical Data and Specifications	**V15-T1-11**
Dimensions	**V15-T1-11**
Level 1 Charging Station	**V15-T1-12**
Level 2 Charging Station	**V15-T1-15**
Electric Vehicle Simulator	**V15-T1-18**
Electric Vehicle Charging Station Pedestal	**V15-T1-20**

Level 1 Universal Receptacle

Product Description

Eaton's 120 Vac Level 1 Universal Receptacle Charging Station provides a safe, reliable means for charging up to four vehicles at a time. It is the perfect solution for buildings that require multiple-vehicle charging, such as apartments and offices.

This innovative charging station provides a universal receptacle for up to four EVs. It's perfect for charging electric cars, e-bikes, NEVs, electric service vehicles and golf carts, simultaneously. For applications that require more than four vehicles to be charged, Eaton's Level 1 Universal Receptacle Charging Stations can be connected in a series with optional utility-grade submetering.

Features

- Perfect for charging electric vehicles (with their respective cordsets), e-bikes, NEVs, electric service vehicles, and golf carts
- 110/120 Vac
- 20, 40, and 80 amp units available
- Charge up to four vehicles
- Pedestal and bollard styles available
- Locking provision to prevent cordset theft
- Support hook to prevent unintentional unplugging with heavier EV cordsets
- Charging stations can be connected in series
- NEMA 5-20 T-slot receptacles
- Rugged stainless steel construction
- Indoor/outdoor rated
- Optional LED lighting available
- Optional utility grade sub-metering
- Customization available

Standards and Certifications

- NEC 625 compliant
- UL Listed to UL 2594 for EV use

Listed

Catalog Number Selection

Level 1 Universal Receptacle

EVSE CR 4 P

Type	Level	Number of Receptacles	Mount
EVSE = Electric Vehicle Supply Equipment	**CR** = Universal receptacle	**1** = One outlet **2** = Two outlets **4** = Four outlets	**P** = Pedestal **B** = Bollard

Product Selection

Level 1 Universal Receptacle

Level 1 Universal Receptacle

Description	
Input voltage	110/120 Vac
Input amperage	20A, 40A or 80A (1–4 vehicles)
Max power	Up to 1.9W at 16A per connection
Mount	Pedestal/bollard
Safety specifications	UL 2594 for EV use cUL 2594 for EV use
Enclosure	NEMA 3R stainless steel
Quick and easy installation	■
Ground fault protection	Yes
Over-current protection	Yes
Features	1–4 multi-vehicle support Integrated high-efficiency LED lighting Build-to-order customization available
Options	Utility grade, sub-metering, access control
Applications/markets	Single and multi-family homes, parking garages, university campuses, truck stops, restaurants, airports, municipalities, shopping centers, corporate offices, hotels
Charge time	

Technical Data and Specifications

Level 1 Universal Receptacle

Description	Specification
Electrical Input	
Voltage	110/120 Vac
Amperage	20A, 40A, 80A (pedestal for 1–4 vehicles)
Electrical Output	
Power	Up to 1.9 kW at 16A per connection
Connection	1-4 NEMA 5-20T receptacles (pedestal mount)
Physical/Environmental	
Weight	50 lbs.
Operating temperature	–30° to 50°C
Enclosure rating	NEMA Type 3R
Safety	
Listed to UL 2594 for EV use	✓
Listed to cUL for EV use	✓
Ground fault protection	✓
Over-current protection	✓

Dimensions

Approximate Dimensions in Inches (mm)

Pedestal

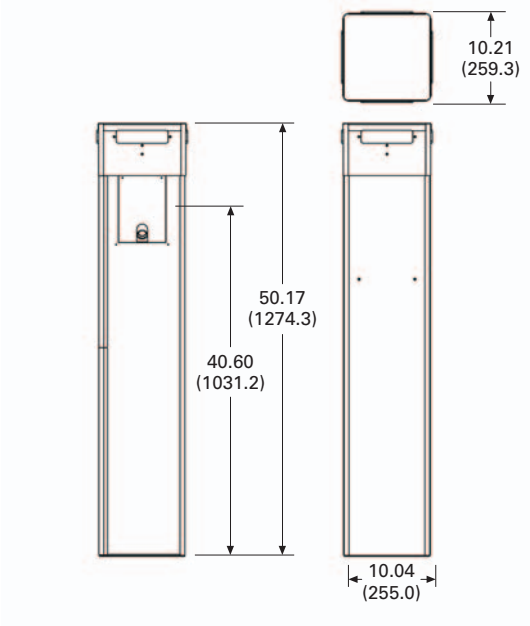

Bollard

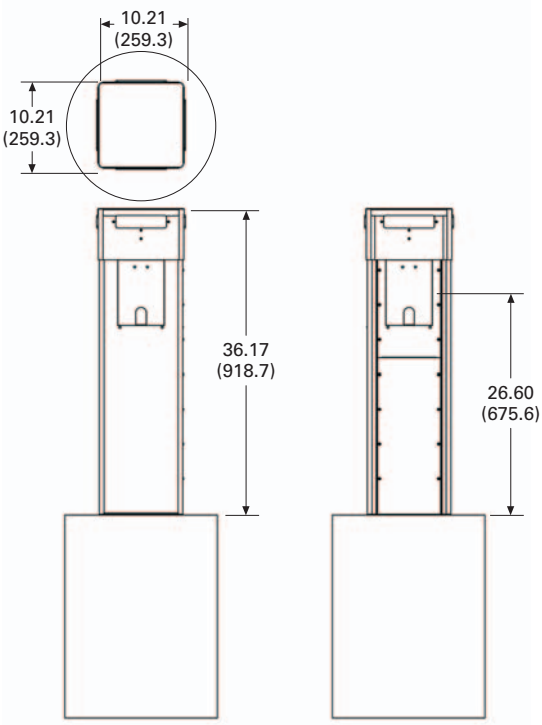

Residential Electric Vehicle Charging

Level 1 Charging Station

Level 1 Charging Station

Contents

Description	*Page*
Charging Stations	**V15-T1-8**
Level 1 Universal Receptacle	**V15-T1-10**
Level 1 Charging Station	
Catalog Number Selection	**V15-T1-13**
Product Selection	**V15-T1-13**
Technical Data and Specifications	**V15-T1-13**
Dimensions	**V15-T1-14**
Level 2 Charging Station	**V15-T1-15**
Electric Vehicle Simulator	**V15-T1-18**
Electric Vehicle Charging Station Pedestal	**V15-T1-20**

Level 1 Charging Station

Product Description

Eaton offers a full family of reliable, responsible electric vehicle (EV) chargers for residential applications. Our established excellence in the automotive and electrical distribution and control industries allows us to provide a wide range of innovative EV charging solutions to suit your individual needs. In addition, the Eaton Certified Contractor Network (ECCN) can provide turnkey services, from design to installation.

This 120 Vac charging station provides an economical and versatile EV charging solution.

Features

- Provides an economical and versatile solution for charging electric vehicles
- 110/120 Vac
- 16A units available
- Wall-mount and pedestal styles
- Quick and easy installation
- Rugged stainless steel construction
- Indoor/outdoor rated
- Auto-reset feature
- Hardwire connected
- Optional advanced cord management to protect SAE J1772 connector
- Standard 24 foot cord
- Optional LED lighting available
- Optional utility grade sub-metering
- Customization available

Intuitive User Interface

Optional LED Lighting

Standards and Certifications

- SAE J1772 compliant connector
- ETL listed to UL 2594/2231/1998

Listed

Catalog Number Selection

Level 1 Charging Station

EVSE L1 30 H L B W

Type	Level	Amperage	Connection	Lighting	Cord Management	Mount
EVSE = Electric Vehicle Supply Equipment	**L1** = Level 1 (110/120 Vac)	**16** = 16A	**H** = Hardwired **C** = Cord-and-plug connected	**N** = None **L** = LED	**B** = Basic **A** = Advanced	**W** = Wall **P** = Pedestal **D** = Dual

Product Selection

Level 1 Charging Station

Level 1 Charging Station

Description	
Input voltage	110/120 Vac
Input amperage	16A
Max power	1.9 kW (L116 style)
Mount	Wallmount or pedestal
Safety specifications	UL 2594 for EV Use cUL 2594 for EV Use
Enclosure	NEMA 3R stainless steel
Quick and easy installation	■
Ground fault protection	Yes
Over-current protection	Yes
Features	SAE J1772 compliant Permanent or cord-and-plug wallmount Quick and easy installation Build-to-order customization available
Options	High-efficiency, LED site-lighting, sub-metering
Applications/markets	Single and multi-family homes, real estate developers, builders, military bases, government city centers, schools, small offices
Charge time	

Technical Data and Specifications

Level 1 Charging Station

Description	Specification
Electrical Input	
Voltage	110/120 Vac
Amperage	16A (L116 Style)
Connection	Hardwired connected
Electrical Output	
Power	1.9 kW (L116 Style)
Connector	SAE J1772
Cable length	24 feet
Physical/Environmental	
Weight	23 lbs.
Operating temperature	–30° to 50°C
Status indicators	5 LEDs: “Power/Ready”, “Connected/Charging”, “Remotely Controlled”, “Fault”, and “Service”
Push buttons	Two buttons: “Override” and “Reset Fault”
Enclosure rating	NEMA Type 3R—stainless steel
Safety	
ETL Listed to UL 2594/2231/1998	✓
cETL Listed	✓
Interlocked power protection	✓
Ground fault protection	✓
Over-current protection	✓

1

Dimensions

Approximate Dimensions in Inches (mm)
(Advanced cord management)

Level 1 Charging Station

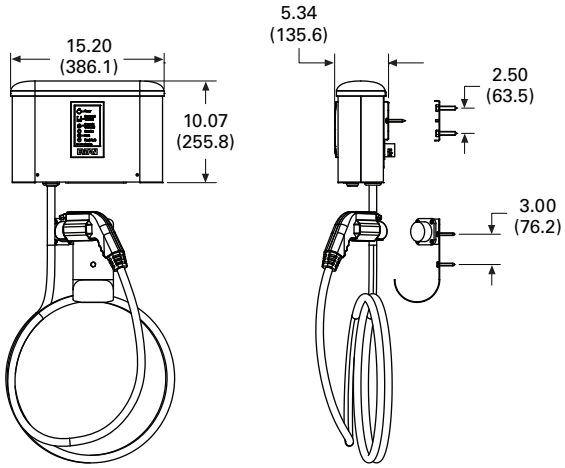

Level 2 Charging Station

Contents

Description	*Page*
Charging Stations	**V15-T1-8**
Level 1 Universal Receptacle	**V15-T1-10**
Level 1 Charging Station	**V15-T1-12**
Level 2 Charging Station	
Catalog Number Selection	**V15-T1-16**
Product Selection	**V15-T1-16**
Technical Data and Specifications	**V15-T1-16**
Dimensions	**V15-T1-17**
Electric Vehicle Simulator	**V15-T1-18**
Electric Vehicle Charging Station Pedestal	**V15-T1-20**

Level 2 Charging Station

Product Description

Using an industry standard J1772 30A or 70A connector, the Level 2 charging station will easily fill a depleted all-electric vehicle battery in three to four hours while the owner is working, shopping or sleeping. The Level 2 charging station is ideal for residential or commercial EV charging applications.

Features

- Charge electric vehicles up to 5 times faster than with a vehicle's cordset
- 208/240 Vac
- 16 and 30 amp units available
- Wall-mount and pedestal styles
- Quick and easy installation
- Rugged stainless steel construction
- Indoor/outdoor rated
- Auto-reset feature
- Hardwire connected
- Optional advanced cord management to protect SAE J1772 connector
- Standard 24 foot cord
- Optional LED lighting available
- Optional utility grade sub-metering
- Customization available

Intuitive User Interface

Optional LED Lighting

Standards and Certifications

- SAE J1772 compliant connector
- ETL listed to UL 2594/ 2231/1998

Listed

1

Catalog Number Selection

Level 2 Charging Station

EVSE L2 30 H L B W

Type	Level	Amperage	Connection	Lighting	Cord Management	Mount
EVSE = Electric Vehicle Supply Equipment	**L2** = Level 2 (208/240 Vac)	**16** = 16A **30** = 30A	**H** = Hardwired **C** = Cord-and-plug connected	**N** = None **L** = LED	**B** = Basic **A** = Advanced	**W** = Wall **P** = Pedestal **D** = Dual

Product Selection

Level 2 Charging Station

Level 2 Charging Station

Description	
Input voltage	208/240 Vac
Input amperage	16A or 30A
Max power	3.8 kW (L216 style) 7.2 kW (L230 style)
Mount	Wallmount or pedestal
Safety specifications	ETL Listed to UL 2594/2231/1998 cETL Listed
Enclosure	NEMA 3R stainless steel
Quick and easy installation	■
Ground fault protection	Yes
Over-current protection	Yes
Features	SAE J1772 compliant Permanent or cord-and-plug wallmount Quick and easy installation Build-to-order customization available
Options	High-efficiency, LED site-lighting, sub-metering
Applications/markets	Single and multi-family homes, real estate developers, builders, government city centers, schools, small offices
Charge time	◐

Technical Data and Specifications

Level 2 Charging Station

Description	Specification
Electrical Input	
Voltage	208/240 Vac
Amperage	16A (L116 Style) 30A (L230 Style)
Connection	Hardwired connected
Electrical Output	
Power	3.8 kW (L216 Style) 7.2 kW (L230 Style)
Connector	SAE J1772
Cable length	24 feet
Physical/Environmental	
Weight	23 lbs.
Operating temperature	–30° to 50°C
Status indicators	5 LEDs: “Power/Ready”, “Connected/Charging”, “Remotely Controlled”, “Fault”, and “Service”
Push buttons	Two buttons: “Override” and “Reset Fault”
Enclosure rating	NEMA Type 3R—stainless steel
Safety	
ETL Listed to UL 2594/2231/1998	✓
cETL Listed	✓
Interlocked power protection	✓
Ground fault protection	✓
Over-current protection	✓

Dimensions

Approximate Dimensions in Inches (mm)
(Advanced cord management)

Level 2 Charging Station

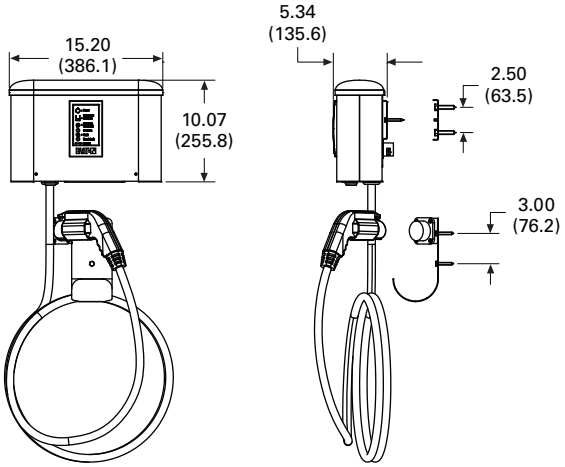

Electric Vehicle Simulator

Contents

Description	*Page*
Charging Stations	**V15-T1-8**
Level 1 Universal Receptacle	**V15-T1-10**
Level 1 Charging Station	**V15-T1-12**
Level 2 Charging Station	**V15-T1-15**
Electric Vehicle Simulator	
Catalog Number Selection	**V15-T1-19**
Technical Data and Specifications	**V15-T1-19**
Dimensions	**V15-T1-19**
Electric Vehicle Charging Station Pedestal	**V15-T1-20**

Electric Vehicle Simulator

Product Description

To ensure correct installation of Electric Vehicle Chargers, Eaton introduces the EVSE Electric Vehicle Simulator. Eaton's EV Simulator allows installers to immediately test the functionality of the EVSE on-site during installation.

Features

- Confirm proper operation of any J1772 compliant EVSE without the need of an actual electric vehicle
- Rugged case is perfect for service personnel
- Easy-to-follow testing instructions printed on unit
- Ready to charge
- Ground fault simulation
- Charging indicator
- Pilot signal test points for oscilloscopes

Easy to Follow Test Instructions

Catalog Number Selection

Electric Vehicle Simulator

EVSE TEST B

Type
EVSE = Electric Vehicle Supply Equipment

Project
Test = Electric Vehicle Simulator

Troubleshooting
B = Basic

Technical Data and Specifications

Electric Vehicle Simulator

Description	Specification
Electrical Input	
Voltage	120/208/240 Vac
Connection	J1772 inlet
Physical/Environmental	
Operating temperature	–30° to 50°C
Status indicator	One light: "Charging"
Push buttons	One button: "Ground Fault"
Switch	One switch: "Ready/Not Ready"
Test points (banana jack receptacles)	Pilot (1 kHz PWM signal) ground
Tests EVSE Safety and Functionality	
EVSE ability to charge vehicle	✓
Confirm interlocked power	✓
Confirm ground fault detection	✓
J1772 "handshake" compatibility	✓

Dimensions

Approximate Dimensions in Inches (mm)

Electric Vehicle Simulator

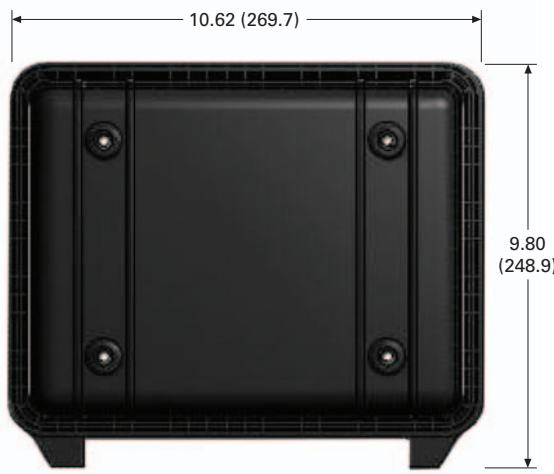

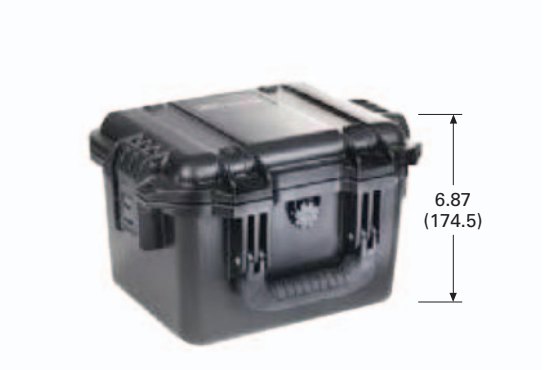

Electric Vehicle Charging Station Pedestal

Contents

Description	*Page*
Charging Stations	**V15-T1-8**
Level 1 Universal Receptacle	**V15-T1-10**
Level 1 Charging Station	**V15-T1-12**
Level 2 Charging Station	**V15-T1-15**
Electric Vehicle Simulator	**V15-T1-18**
Electric Vehicle Charging Station Pedestal	
Technical Data and Specifications	**V15-T1-21**
Wiring Diagram	**V15-T1-21**
Dimensions	**V15-T1-21**

Electric Vehicle Charging Station Pedestal

Product Description

Plug-in electric vehicles are becoming popular due to rising fuel costs and environmental concerns.

Eaton's EV Charging Station provides a safe and reliable means to quickly power up electric vehicles.

Features

- EV Charging Pedestals ship with EV Chargers mounted and pre-wired
- Single or dual EVSE pedestal options
- Available with Eaton Level 1 and Level 2 charging stations
- Quick and easy installation
- Rugged stainless steel construction
- Indoor/outdoor rated
- Standard 24 foot cord
- Optional utility-grade sub-metering
- Greater flexibility for external installations
- Dual EVSE pedestal option allows for multiple vehicle charging
- Customization available

Pedestal Wiring

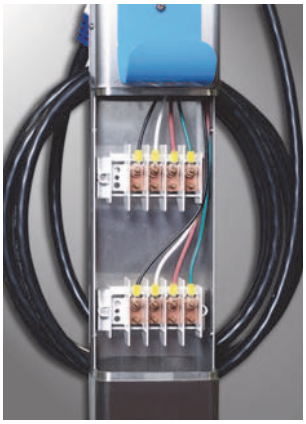

Standards and Certifications

- UL 1773/50/50E

Listed

Technical Data and Specifications

Electric Vehicle Charging Station Pedestal

Description	Specification
Weight (lbs.)	
Single EVSE—mount pedestal	42 lbs.
Dual EVSE—mount pedestal	65 lbs.
Enclosure	
Rating/material	NEMA 3R—stainless steel

Wiring Diagram

Electric Vehicle Charging Station Pedestal

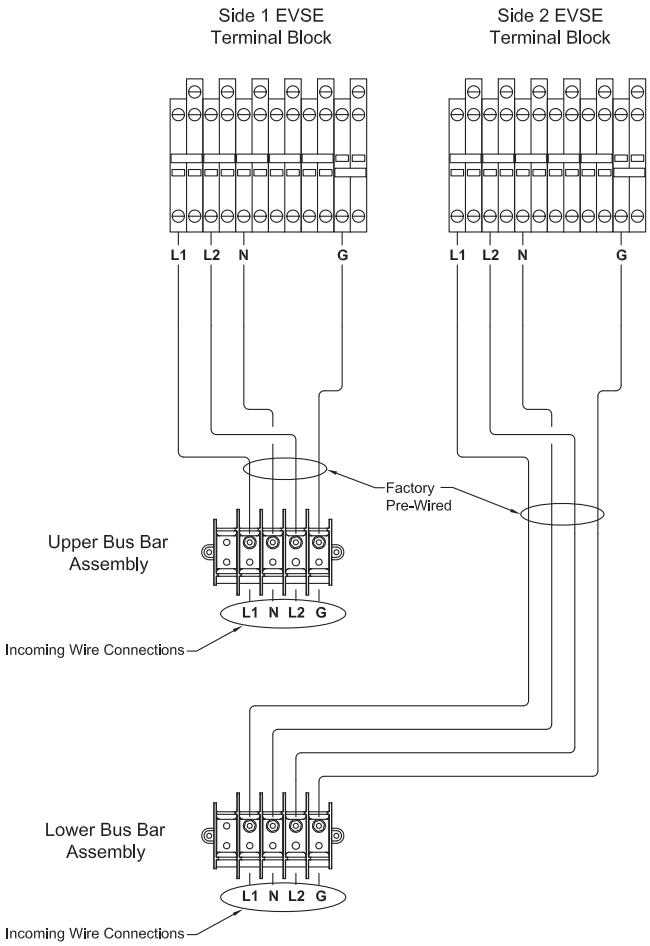

Dimensions

Approximate Dimensions in Inches (mm)

Electric Vehicle Charging Station Pedestal
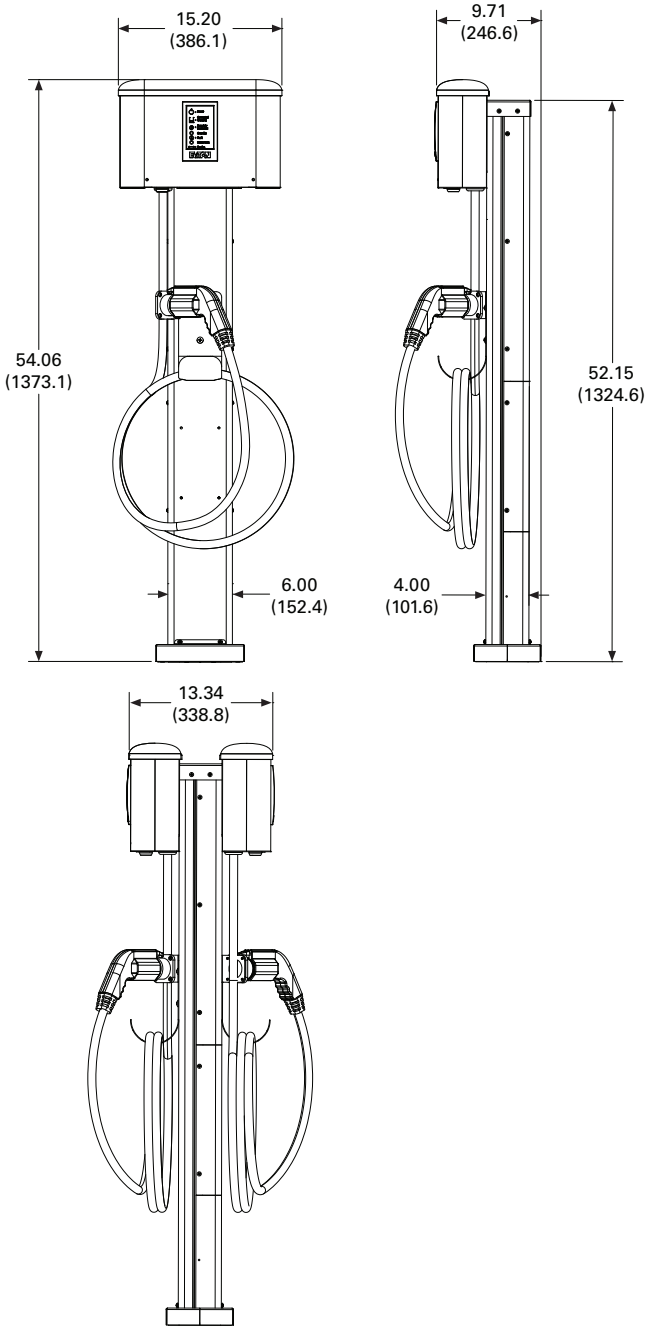
Description	
Single EVSE pedestal—H x W x D	54.06 (1373.1) x 15.20 (386.1) x 9.70 (246.4)
Dual EVSE pedestal—H x W x D	54.06 (1373.1) x 15.20 (386.1) x 13.30 (337.8)