## Product Description

EATON Corporation's Automatic Transfer Switches provide automatic transfer of an electrical load to a standby power supply in the event of drop or loss of voltage of any or all phases of the normal power supply.

Upon the restoration of the normal supply, the electrical load is automatically re-transferred to the normal power supply.

## Transfer Switch Features

### Electrically and Mechanically Interlocked

The FPATS transfer switch operating mechanisms are mechanically interlocked to prevent the normal and alternate source from connecting at the same time.
The switch operates upon signals received from the ATC-300 Plus controller.

### Engine Test Button

An engine test button is provided on the ATC-300 controller that can be used to test the Source 2 (generator) engine. The operator can select the engine run test time (0-600 minutes). As well, a silence pushbutton is provided which de-energizes the alarm bell.

### Automatic Transfer

The FT Series Transfer Switches will perform an automatic transfer from Normal to Alternate source when the Voltage drops to 85% of normal, or there is a loss of any phase and/or Phase Reversal.

### Alarm Relay

The alarm relay is de-energized to indicate an absence of an alarm state and energized to indicate the presence of an alarm condition. Alarm conditions include:

Improper Circuit Breaker Operation
Motor Operator Failure
Lockout
Failsafe Condition
Aborted Engine Test
Aborted Plant Exerciser

## Product Features

### ATC-300 Plus

The panel mounted, multi-function, microprocessor based ATC-300 Plus controller accurately monitors two power sources and provides the necessary intelligence to reliably operate the transfer switch through a series of programmed sensing and timing functions.

### Keypad Programming

The ATC-300 Plus controller membrane is equipped with seven keypad input buttons which are used to program the controller as well as set operating parameters.

### Voltage and Frequency Sensing

The ATC-300 Plus continuously monitors the normal source for out of range setpoint values. When the source is outside the dropout setpoints, the source will become unavailable. This prompts a transfer to the alternate source. Retransfer occurs when the normal source's frequency and/or voltage return within pickup setpoints.

## LED Status Indication

Five LED's indicate the status of the power sources.

| | |
|---|---|
| Source 1 Available | Source 1 Connected |
| Source 2 Available | Source 2 Connected |
| Unit Status | |

### Source 1 (Normal) Available

The white Source 1 Available LED illuminates when the Source 1 power source is within the setpoint ranges for the nominal voltage and frequency setting.

### Source 2 (Normal) Connected

The green Source 1 LED illuminates when the Source 1 switching device and its associated position indicating auxiliary contact are closed.

### Source 2 (Emergency) Available

The amber Source 2 Available LED illuminates when the Source 1 power source is within the setpoint ranges for the nominal voltage and frequency setting.

### Source 2 (Emergency) Connected

The red Source 2 Connected LED illuminates when the Source 2 switching device and its associated position indicating auxiliary contact are closed.

## Input Pushbuttons

### Step / Enter

The Step/Enter pushbutton allows the user to scroll through the information and setpoint displays. When the Step/Enter button is pressed, the information on the LCD display advances through the voltage(s), frequency, and status condition of Source 1, then Source 2, then the time and date information, then the history information, then the setpoints - one step at a time.

### Increase

The Increase button allows the user to increase the value of the setpoints. When the ATC-300 is in the "Program" Mode, each time the Increase button is pressed, the value of the displayed item will increase by one.

### Decrease

The Decrease button allows the user to increase the value of the setpoints. When the ATC-300 is in the "Program" Mode, each time the Decrease button is pressed, the value of the displayed item will decrease by one.

### Alarm Reset Function

Pressing the Increase and Decrease buttons simultaneously will reset the Alarm function. If this is done while viewing any of the historical logged values in the program mode, the value of the current item resets to zero.

### Bypass Time Delay Function

(Step/Enter+Help/Lamp Test)
Pressing the Step / Enter and Help / Lamp Test buttons simultaneously, will bypass the TDNE or TDEN functions when they are actively timing.

### Help / Lamp Test

If the Help/Lamp Test pushbutton is pressed when a message is present on the LCD Display, a detailed description of the message will appear. It will scroll across the bottom of the display.
If the LCD Display is displaying the Home screen when the Help/Lamp Test key is pressed, all of the LED's will momentarily illuminate, then the following information will scroll across the display:
Serial Number of the ATC-300 Plus controller, Hardware Revision number, Software Versions and Revision number, Feature Code, Firmware Version

# Techinical Data and Specificiations

## Line Terminals (Incoming Cables)

| | Line Terminals on Main Isolation Switch (Incoming Cables) | | | | | | |
|---|---|---|---|---|---|---|---|
| | LINE VOLTAGE | | | | | Quantity & Cable Sizes | Service Entrance Ground Lug Quantity & Cable Sizes |
| | 200-208 | 220-240 | *380-415 | 440-480 | 550-600 | | |
| Max HP | 25 | 30 | 40 | 60 | 75 | (1)#14-1/0 PER Ø (CU/AL) | (1)#14-2/0 (CU/AL) |
| | 40 | 50 | 75 | 100 | 100 | (1)#4-4/0 PER Ø (CU) | (1)#4-350MCM (CU/AL) |
| | 75 | 75 | 150 | 200 | 200 | (1)#3-350MCM PER Ø (CU/AL) | (1)#4-350MCM (CU/AL) |
| | 100 | 125 | 200 | 250 | 300 | (2)3/0-250MCM PER Ø (CU/AL) | (2)1/0-750MCM (CU/AL) |
| | 150 | 200 | 350 | 400 | 400 | (2)250-350MCM PER Ø (CU/AL) | (2)1/0-750MCM (CU/AL) |

## Installation Parameters

### NFPA 20 - Arrangement II Individually Listed Fire Pump Controllers and Power Transfer Switch

When applying Arrangement II, all installations should comply with NFPA 20 - Section 9.3.2 and Section 10.8.2.2.

### NEMA 2 Enclosures

All FPATS transfer switches come standard with NEMA 2 enclosures unless otherwise ordered. Available options include: NEMA 3R, 4, 4X, 12.

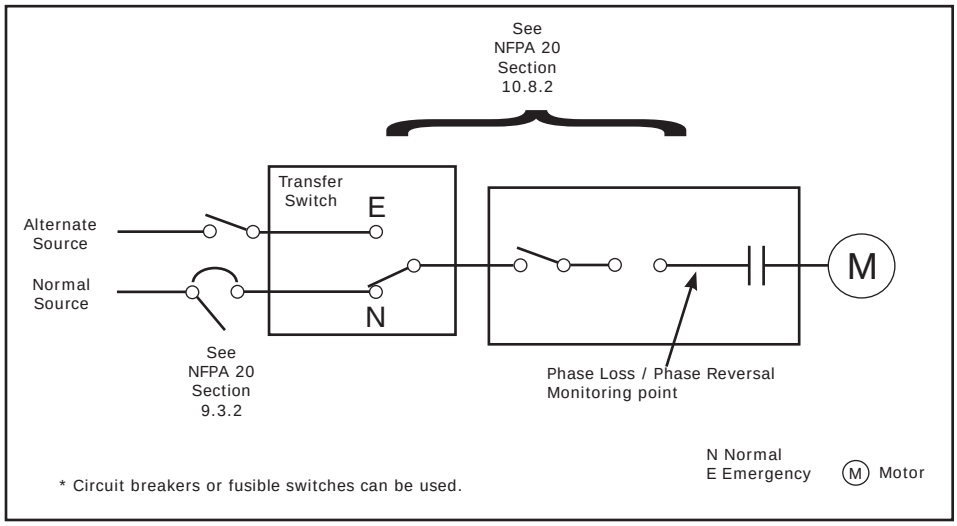


**NFPA 20 - Arrangement II**

## Standards & Certification

The FPATS transfer switches meet or exceed the requirements of Underwriters Laboratories, Underwriters Laboratories Canada, the Canadian Standards Association, New York City building code, U.B.C. / C.B.C. seismic requirements, and are built to NFPA 20 standards.

N. Y. C. APPROVED

## Transfer Switch Terminal Block

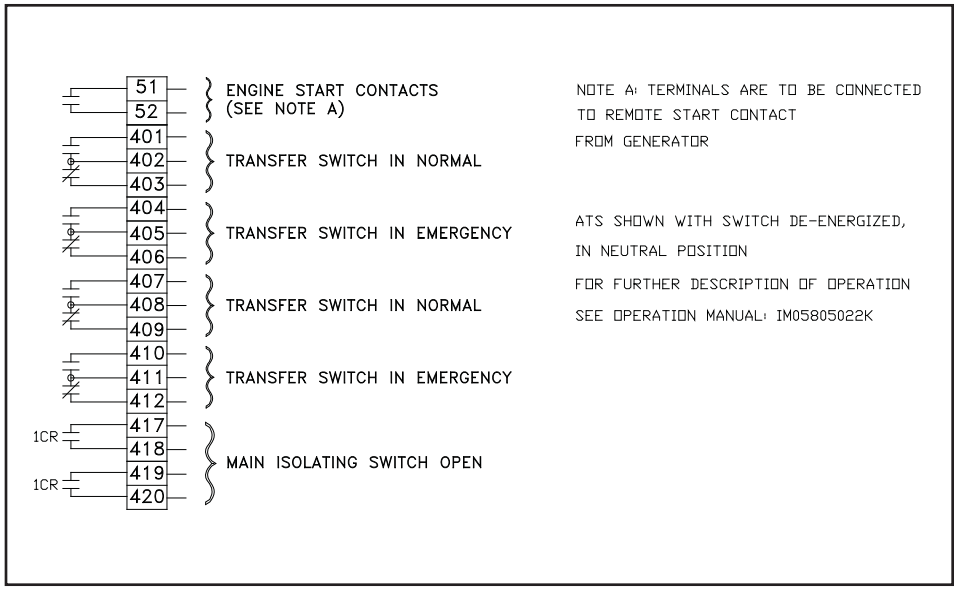

# Main Display

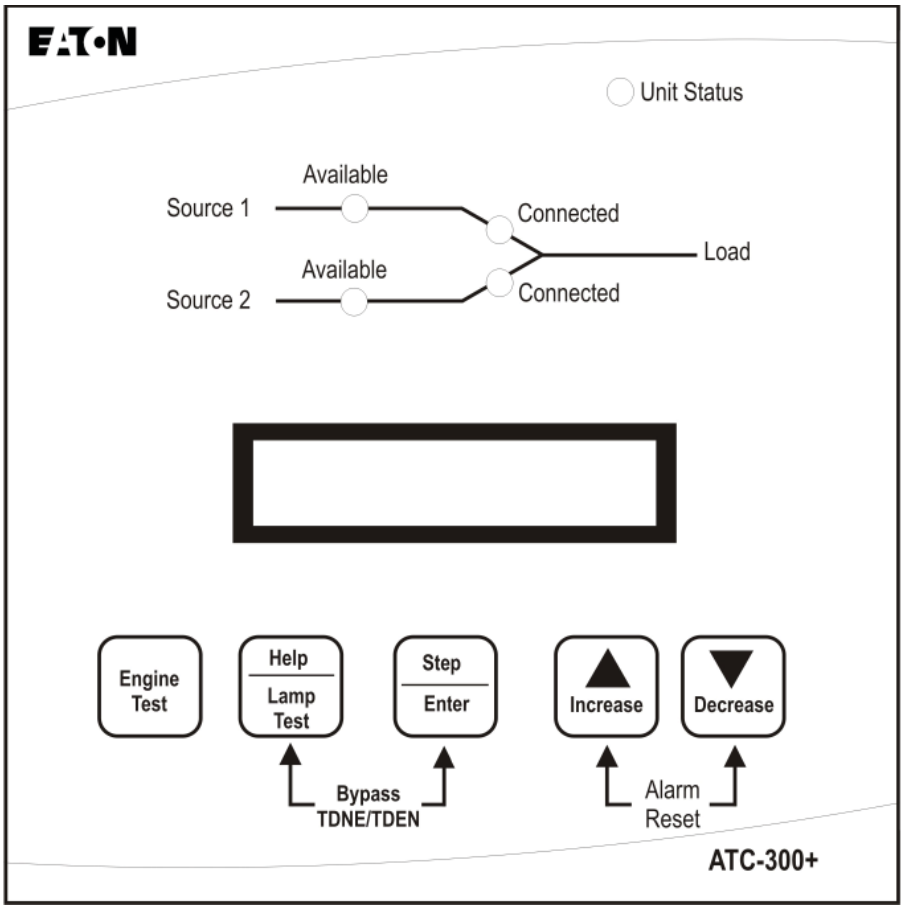


Note: For setup and programming information, refer to the Operation Manual for the EATON ATC-300 Plus Automatic Transfer Switch Controller - IM05805022K

## Dimensions

## Standard Enclosure - Type NEMA 2, 3R, 12

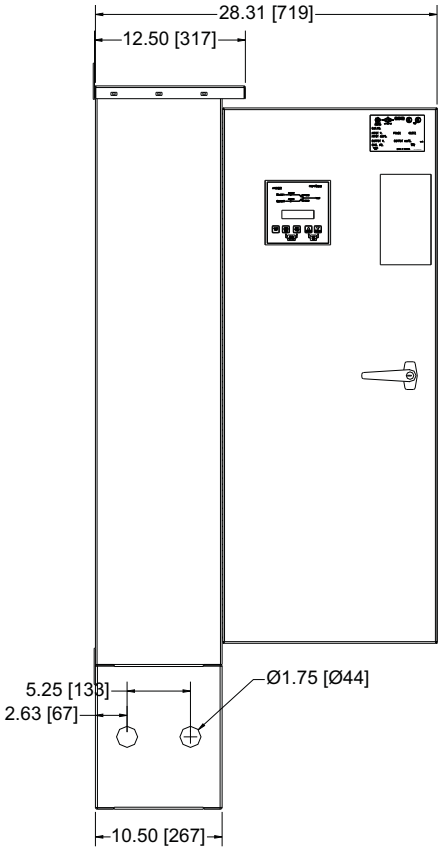


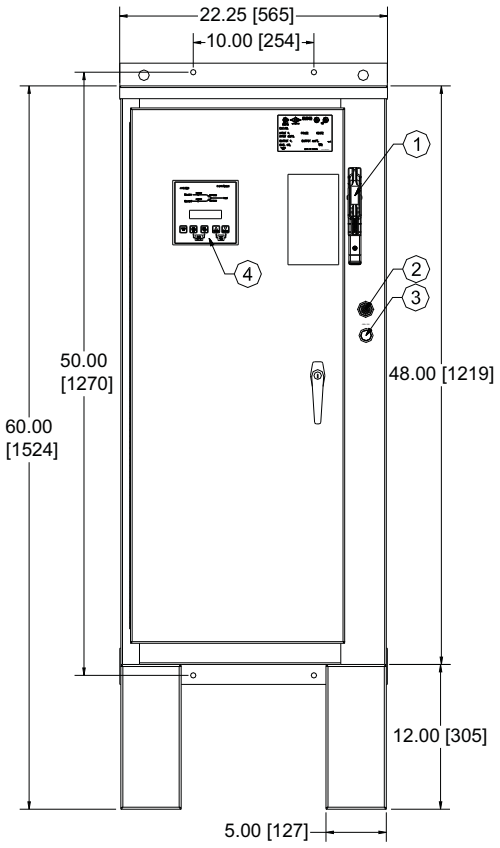


1 - EMERGENCY POWER DISCONNECT
2 - ALARM HORN
3 - GENERATOR DISCONNECTED
4 - MAIN ATS DISPLAY BOARD
5 - RECOMMENDED CABLE ACCESS (BOTTOM ONLY)

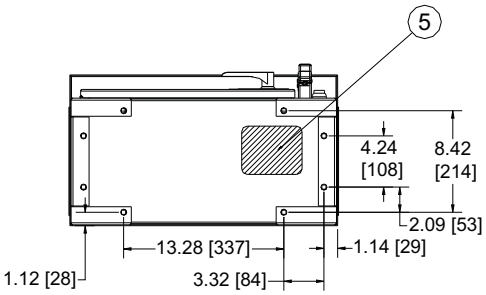


Dimensions in inches and [millimeters].

| Motor Hp | Line Voltage | Withstand Rating | | | Approx. Weight Lbs. (Kg) |
|---|---|---|---|---|---|
| | | Standard | Intermediate | High | |
| 5 - 40 | 200 - 208V | 100,000 | Consult Factory | Consult Factory | 180 (81) |
| 5 - 50 | 220 - 240V | | | | |
| 5 - 75 | 380 - 415V | 65,000 | | | |
| 5 - 100 | 440 - 480V | | | | |
| 5 - 100 | 550 - 600V | 25,000 | | | |

N. Y. C.
APPROVED

NOTES:
1. All enclosures finished in FirePump red.
2. Cable Entrance bottom only.
3. Standard Enclosure type NEMA 2.

# Electrical Wiring Schematic

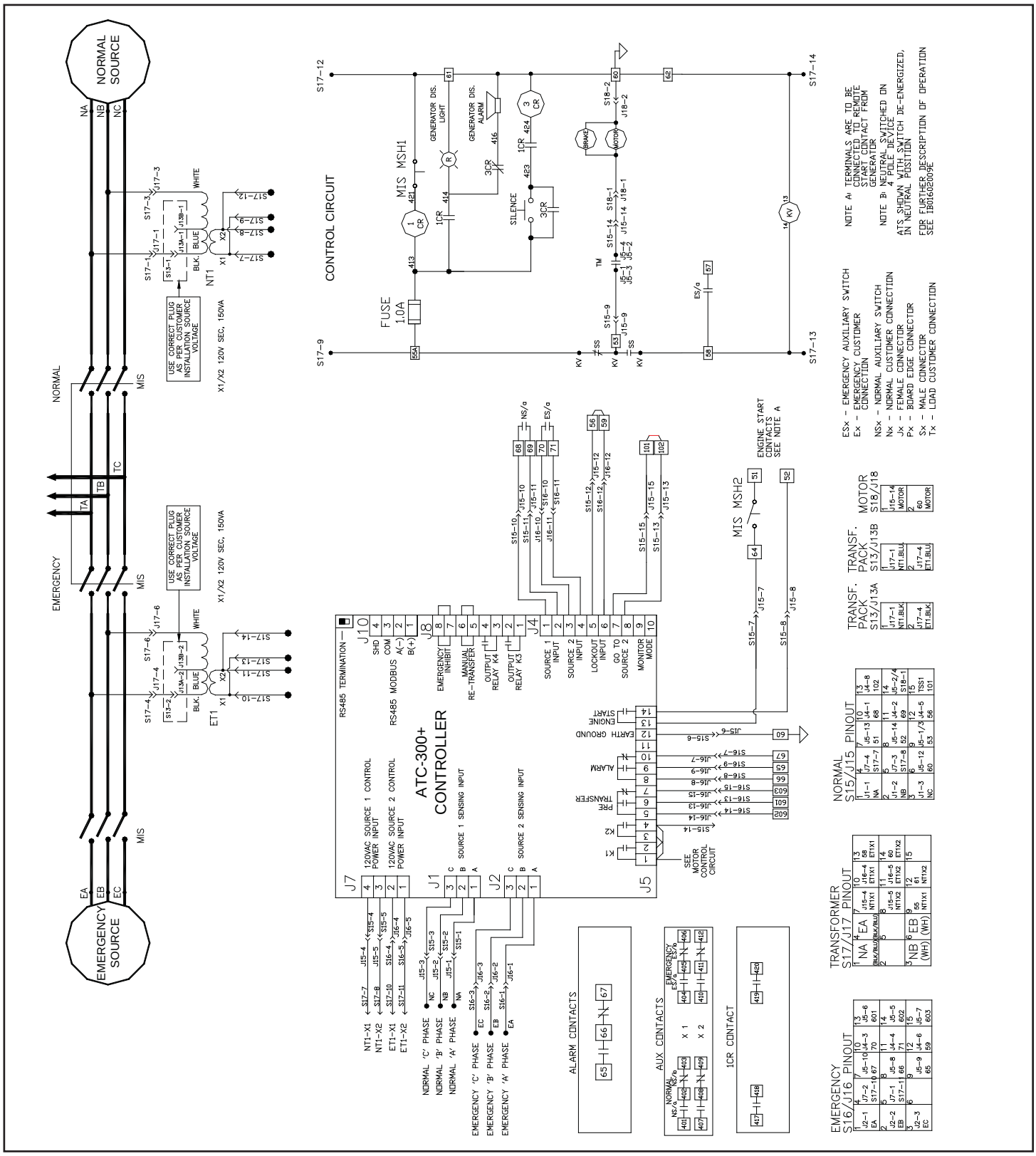

## Field Connections

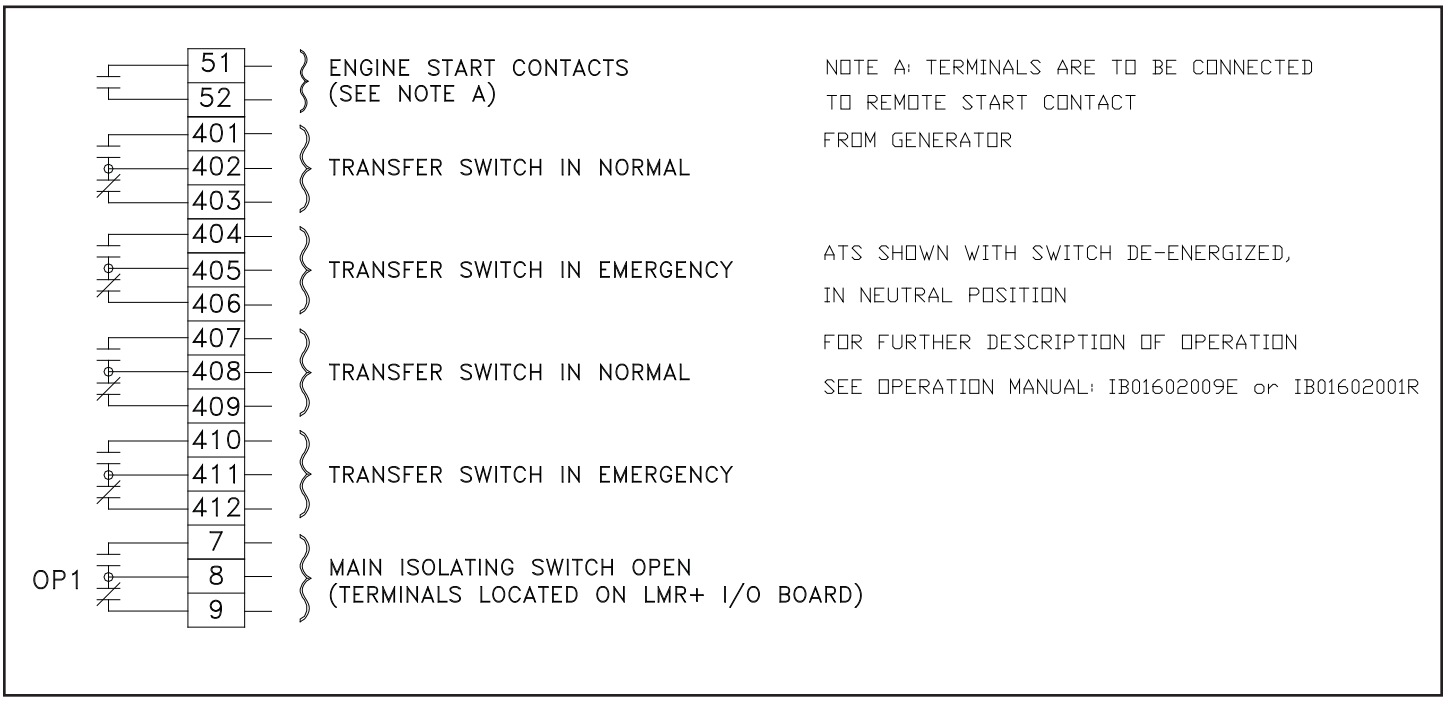


## Technical Data and Specifications

Line Terminals (Incoming Cables)

| | Line Terminals on Main Isolation Switch (Incoming Cables) | | | | | | |
|---|---|---|---|---|---|---|---|
| | LINE VOLTAGE | | | | | Qty. & Cable Sizes | Service Entrance GND. LUG Qty. & Cable Sizes |
| | 200 - 208 | 220 - 240 | 380 - 415 | 440 - 480 | 550 - 600 | | |
| Max HP | 25 | 30 | 40 | 60 | 75 | (1)#14-1/0 PER Ø (CU/AL) | (1)#14-2/0 (CU/AL) |
| | 40 | 50 | 75 | 100 | 100 | (1)#4-4/0 PER Ø (CU) | (1)#4-350 MCM (CU/AL) |
| | 75 | 75 | 150 | 200 | 200 | (1)#3-350MCM PER Ø (CU/AL) | (1)#4-350 MCM (CU/AL) |
| | 100 | 125 | 200 | 250 | 300 | (2)3/0-250MCM PER Ø (CU/AL) | (2) 1/0-750MCM (CU/AL) |
| | 150 | 200 | 350 | 400 | 400 | (2)250-350 MCM PER Ø (CU/AL) | (2) 1/0-750MCM (CU/AL) |

## Part Number / Options Selection Guide
## Stand Alone Automatic Transfer Switches

# FPATS

| Horsepower | | | | |
|---|---|---|---|---|
| 15 | 40 | 100 | 250 | 450 |
| 20 | 50 | 125 | 300 | 500 |
| 25 | 60 | 150 | 350 | |
| 30 | 75 | 200 | 400 | |

| Voltage | |
|---|---|
| **A** = | 200 - 208V |
| **B** = | 220 - 240V |
| **C** = | 380V |
| **D** = | 440 - 480V |
| **E** = | 550 - 600V |
| **F** = | 415V |

| Frequency | |
|---|---|
| **5** = | 50 Hz |
| **6** = | 60 Hz |

| Language |
|---|
| **L1** = English |
| **L2** = French |
| **L5** = Spanish |

*Note: Other languages available. Consult Factory for details.

| Options |
|---|
| **E1** = NEMA 3R - Raintight Enclosure |
| **E3** - NEMA 12 - Industrial Dust Tight Enclosure |

N. Y. C. APPROVED