Product Description

The DIESEL Plus Fire Pump Controllers from Eaton Corporation are designed to control and monitor 12 or 24 volt, diesel fire pump engines and are among the most technically advanced diesel engine controllers available.

They are an enhanced version of the original microprocessor-based, FD100 Series of diesel engine controllers. Programming is straightforward due to the use of the core firmware and menu structure utilized in the LMR Plus Series of electric controllers.

The controller can be ordered with the option to display and output current values and status, on command, from various software protocols.
An embedded web page for retrieving diagnostics and history reports, can be accessed from the optional Ethernet communication port.
An optional Rs485 serial port can be used for direct connection to a computer for data transfer.

Product Features

Communication

Embedded Web Page

The embedded web pages allow the user to view the current status of the controller as well as all amperage readings, set points, diagnostics and history. An external computer connected via the optional ethernet port is used to access the pages. The specific data required can be downloaded for reference purposes.

Communication Types

USB
The USB port is used to download the controller message history, statistics, diagnostics, status and configuration data to a USB disk drive. The USB port can also be used to upload custom messages, additional languages, and update the microprocessor firmware.

Ethernet

An external computer can communicate with the Diesel Plus controller via the optional ethernet port. An embedded web page will display the controller's current status, as well as display all current readings, set points and history.

Modbus

The Diesel Plus fire pump controllers have the option to communicate to systems using the Regular level of Modbus (includes both RTU and ASCII transmission modes).
Communication settings are user configurable through the Diesel Plus configuration menu.

Field Connections

Inputs

Standard Inputs
- Deluge Valve
- Low Suction
- Interlock On
- Pump Start
- Low Fuel
- Programmable Inputs (10)

Programmable Inputs

Up to 10 additional, programmable inputs can be programmed to indicate up to 13 different types of inputs. They can be programmed to energize the common alarm output, link to relays and optional LED's and latch until reset by the user.
All optional inputs, outputs and LED's can be linked, as required. They can also be programmed with time delay functions.

Outputs

Standard Output Relays
All standard output relays are 8 amp, DPDT.
- Future # 1
- Future # 2
- Low Fuel
- Auto Mode
- Common Alarm

Optional Output Relays

There is provision to add up to eight additional relay outputs, via four optional relay output boards which mount in a snap-on configuration. Each board contains a maximum of 2 additional relays.

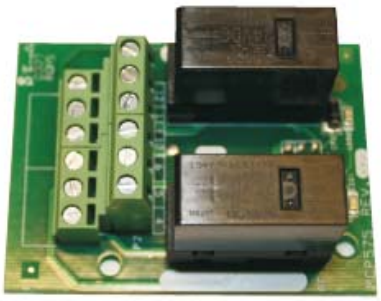

Engine Run Relay

The Power I/O Board houses a 10 Amp engine run relay which is used for alarm purposes, or to power external louvers.

Common Alarm Relay

The FD120 controller has a common alarm relay which energizes whenever there are any alarm conditions present. This relay is energized under normal conditions and has LED status indication.

Alarm Relay Rating

All alarm relays are rated 10 amps, 220Vac, 1/3HP resistive load only.

Programmable Outputs

Up to 10 additional, programmable outputs (two standard; eight via optional output boards) can be programmed to indicate up to 45 output conditions. They can be programmed for fail safe and latch until reset by the user. All optional inputs, outputs and LED's can be linked, as required. They can also be programmed with time delay functions. As well, six optional alarm LED's can be programmed for up to 28 alarm conditions.

Power / Voltage

Universal Voltage Supply

The controller can be powered with supply voltages from 90Vac to 240Vac by connecting to the three input terminals L,N,G located on the bottom left of the engine board.

Dual Output

12 or 24Vdc output is selectable via a DIP Switch located on the battery chargers.
Note: Each controller is factory set for 12Vdc. If 24Vdc is required from the factory, it should be noted on the ordering information.

Line Filter

A line filter incorporated onto the engine board, is used to reduce/eliminate external incoming voltage transients.

AC Power Disconnect

A breaker located inside the controller on the Engine Board, is used to switch on and off AC power to the unit. It will illuminate when energized.

DC Power Disconnect

The engine board houses two on-board circuit breakers used to switch on or off DC power from the batteries.
Each breaker has an LED mounted on the engine board that illuminates when the breaker is energized.

Powering Business Worldwide
March 2013

Alarm and Status Indication

Accessibility
All alarm and status LED's as well as the LCD Display and programming buttons are accessible from the front of the controller.

LCD Display
The Controller Display Board contains a 4 Line by 40 Characters wide, backlit, LCD display which is capable of generating multiple languages. The display will show the current system pressure, time and date, charger output voltage and any custom messages, alarms or timer values.

Alarm & Status LED's
Status LED's
The controller is supplied with ten (10) green status LED's for the following:
ENGINE RUN
REMOTE START
INTERLOCK ON
DELUGE VALVE
Six Programmable LED's - (numbered 1 through 6)

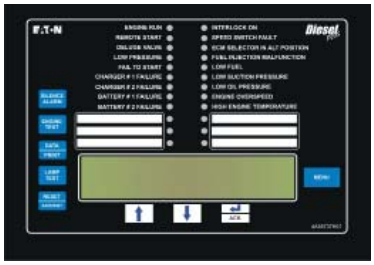

Alarm LED's
The controller is supplied with fourteen (14) red alarm LED's for the following:
BATTERY #1 FAILURE
CHARGER # 1 FAILURE
BATTERY #2 FAILURE
CHARGER # 2 FAILURE
LOW PRESSURE
SYSTEM OVER PRESSURE
LOW SUCTION PRESSURE
LOW FUEL
FAIL TO START
HIGH ENGINE TEMP
LOW OIL PRESSURE
ENGINE OVER SPEED
ECM SELECTOR IN ALT POSITION
FUEL INJECTION MALFUNCTION

Statistics
Up to 27 of statistical points are recorded to provide a quick review of how the system has been operating. The statistics can be viewed on the main display, saved to a USB disk drive, or viewed on the embedded webpage.

Diagnostics
Up to ten diagnostic points are recorded that can be used to help in troubleshooting issues with the controller. The diagnostics can be viewed on the main display, saved to a USB disk drive, or viewed on the embedded webpage.

Message History
Up to10k alarm/status messages can be stored in the controller memory. They can be viewed on the main display, saved to a USB disk drive, or viewed on the embedded webpage.

DC Fail
A visual indication and audible alarm is provided to indicate DC power loss due to one or both batteries being disconnected from the controller. This indication will also be provided if the controller is not operating due to an electronic board failure.

Programmable Features
- Languages
  (English, French, Spanish Standard. Other languages are available. Consult factory.)
- Date and Time
- Pressure Start and Stop Points
- Low and High Pressure Alarms
- Stop Mode
- Low Suction Shutdown
- Pressure Recording Parameters
- Run Period Timer
- Weekly Test Timer
- Sequential Start Timer
- AC Failure Alarm
- AC Fail to Start

Enclosures

Ratings
All FD120 controllers come standard with NEMA 2 enclosures unless otherwise ordered.
Available options include: NEMA 3R, 4, 4X, 12.

Reduced Size
A streamlined internal design has allowed the overall size of the DIESEL Plus controllers to be reduced from previous models. See dimensional drawings on our website.

Technical Specifications

Supply Voltage: 90-240Vac
Output Voltage: 12-24Vdc
Hertz: 50/60 Hz
Enclosure: Standard NEMA 2
Optional NEMA 3R, 4, 4X, 12
Temperature: 4 to +50 deg. C; 39 to +122 deg. F
Alarm Relays: 24Vdc, DPDT 8amp
Engine Run Relay: 24Vdc, DPDT 10amp
Crank / Fuel Stop Relays: 24Vdc, SPDT
Pressure Transducer: 500 psi
Immunity Compliance: Environment A
Emission Compliance: Environment B

Battery Chargers
- Mode: Switching
- Dual 10 Amp
- Communication to Power I/O Board
- Diagnostics Recording
- Lead Acid or NiCad
- Three Step Charge
- Internal Temperature Monitoring
- Universal Voltage Input
- Selectable Dual Voltage Output

Standards & Certification

The FD120 Diesel Engine Fire Pump Controllers meet or exceed the requirements of Underwriters Laboratories, Underwriters Laboratories Canada, Factory Mutual, the Canadian Standards Association, New York City building code, CE mark and U.B.C / C.B.C. Seismic requirements, and are built to NFPA 20 standards.

N. Y. C.
APPROVED

Main Display

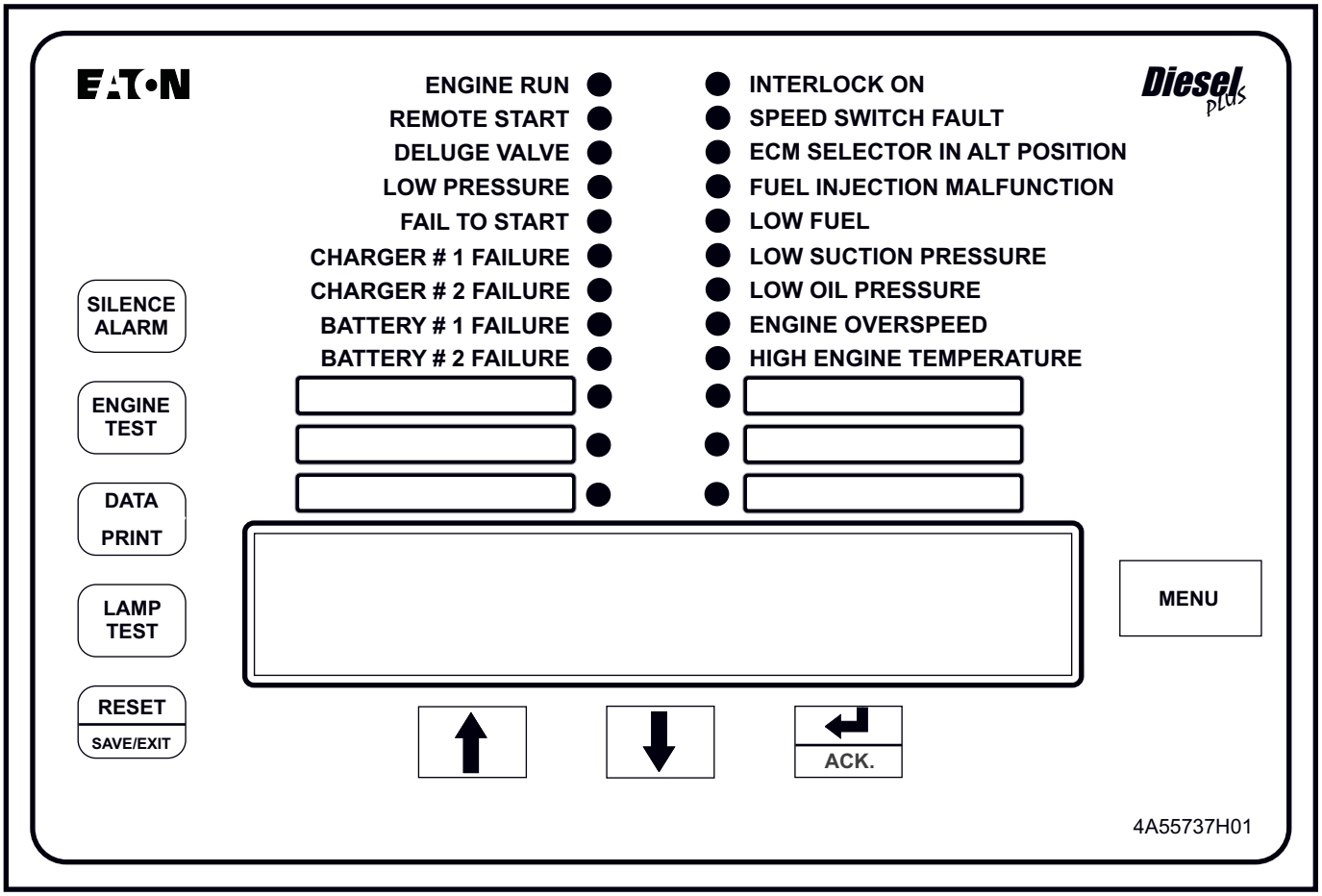

NOTES:
1. Refer to the DIESEL Plus technical manual for details and setup information, as well as programming and custom labeling for the Programmable LED's # 1 through # 6.

N. Y. C.
APPROVED

Electrical Wiring Schematic

NOTES:
1. DELUGE VALVE INPUT NORMALLY CLOSED. REMOVE JUMPER IF USED.
2. ALL RELAY CONTACTS ARE SHOWN IN NO POWER CONDITION.
3. ALARM CONTACTS RATED FOR 8A/250VAC. ENGINE RUN CONTACTS RATED 10A/250VAC.

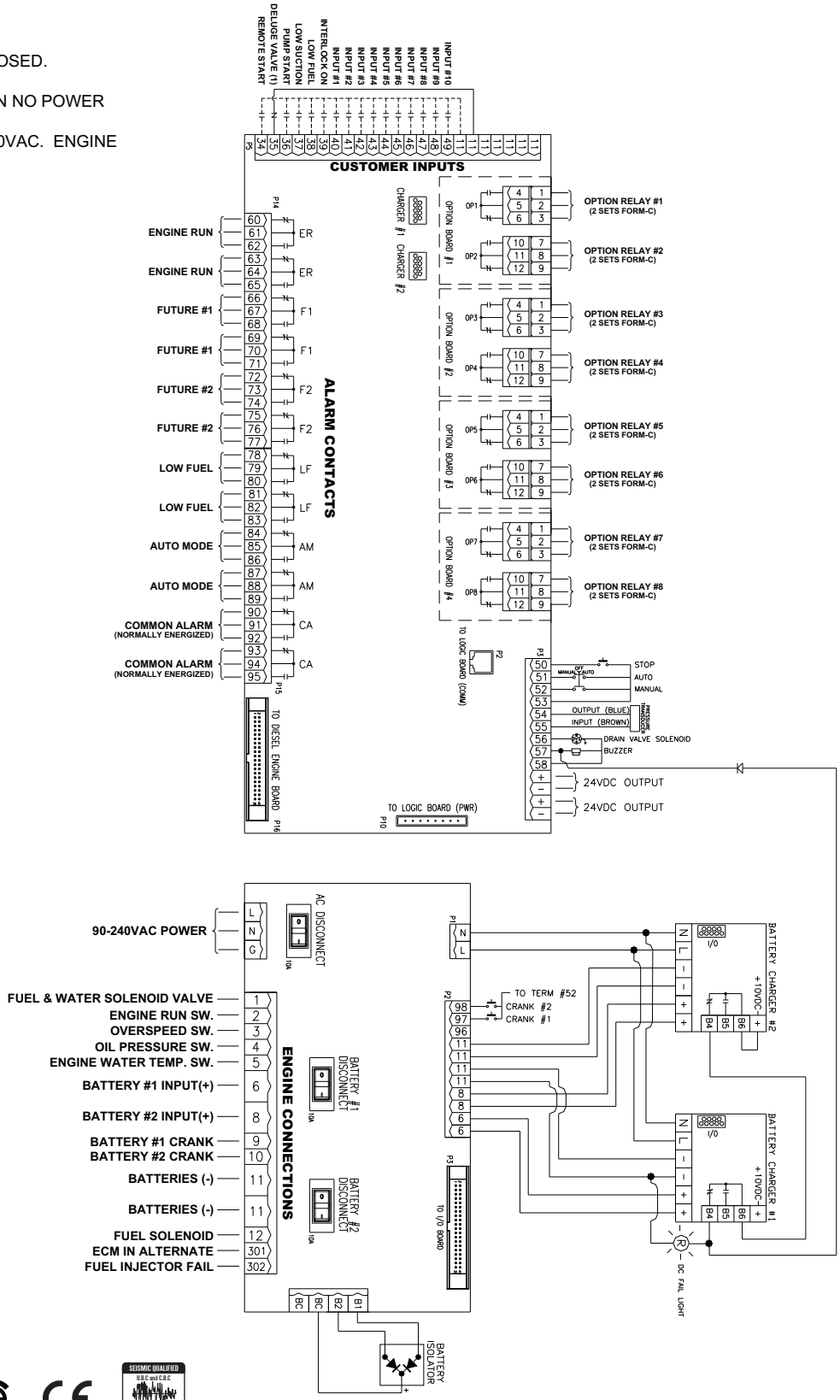

N. Y. C. APPROVED

Field Connections

Engine Board Terminal Blocks

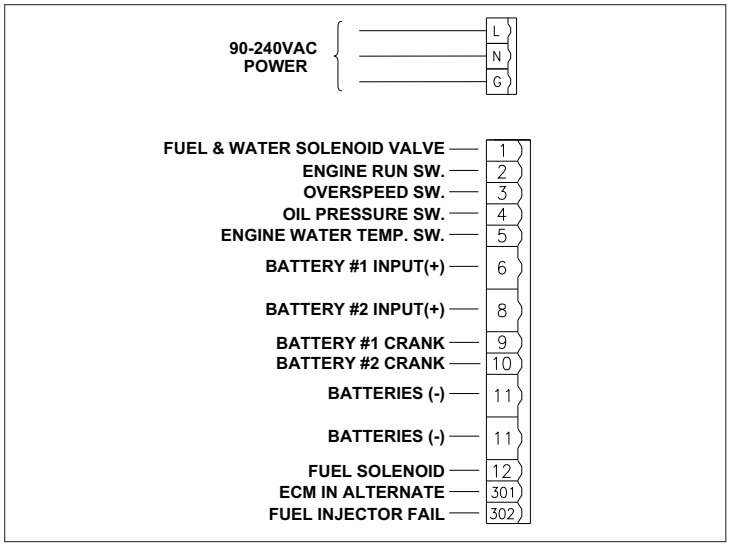

Inputs

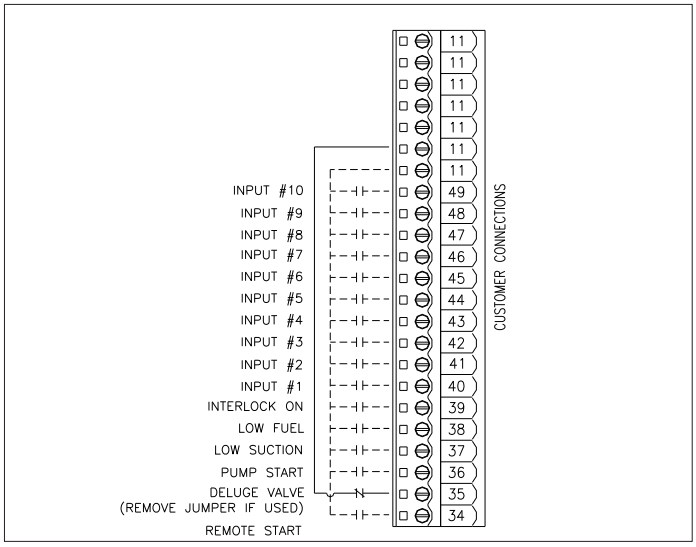

Outputs

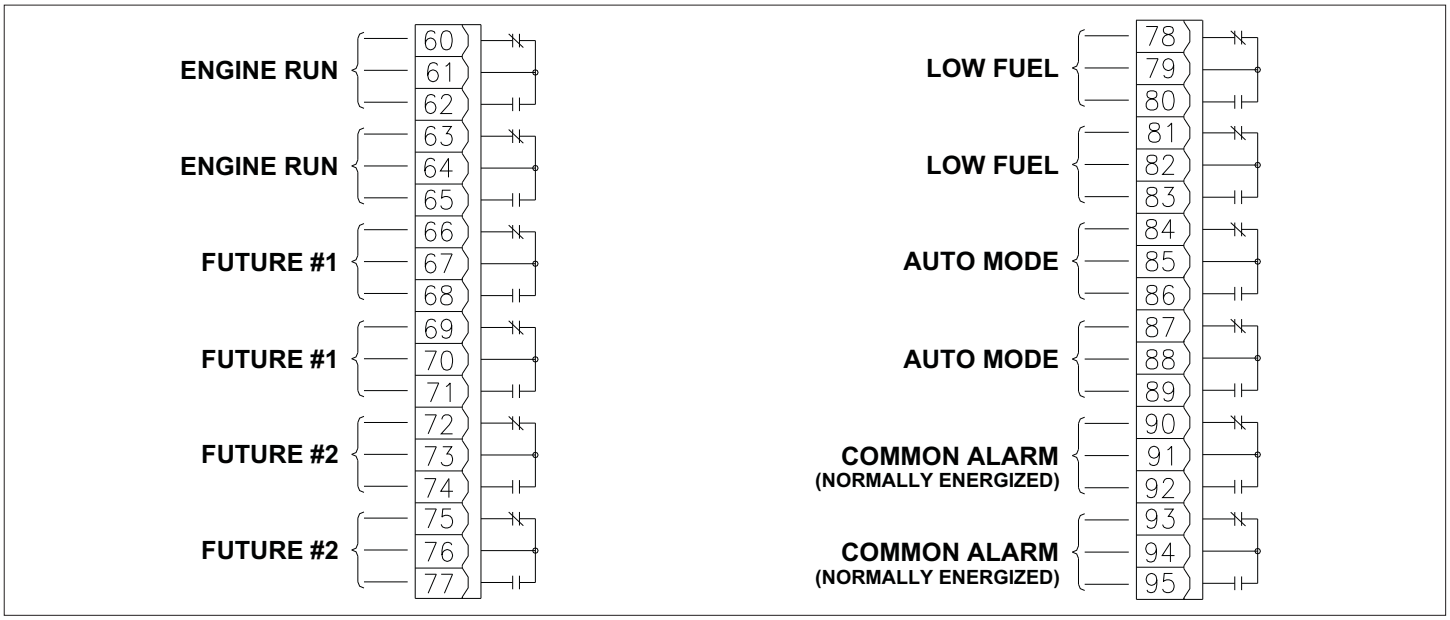

Technical Data and Specifications

Line Terminals (Incoming Cables)

Recommended Wire Size	Terminal Number	Distance
I/O Board		
Stranded # 14 (1.63 mm)	11, 34-49, 60-95	N. A.
Stranded # 14 (1.63 mm)	Option Board Terminals	N. A.
Engine Board		
Stranded # 14 (1.63 mm)	1-5, 9, 10, 12, 301, 302, L, N, G	N. A.
Battery Wire		
Stranded # 10 (2.59 mm)	6, 8, 11	0 feet to 25 feet (7.62m)
Stranded # 8 (3.26 mm)	6, 8, 11	25 feet to 50 feet (7.62 - 15.24m)

N. Y. C. APPROVED

Technical Data and Specifications - LMR Plus Electric Controllers

Line Terminals on Main Isolation Switch (Incoming Cables)

Qty. & Cable Sizes	
American Wire Gauge (AWG / MCM)	Diameter (mm)
(1)#14-1/0 PER Ø (CU/AL)	(1.63 - 8.25 mm)
(1)#4-1/0 PER Ø (CU)	(5.19 - 11.68 mm)
(1)#3-350MCM PER Ø (CU/AL)	(5.83 - 15.03 mm)
(2)3/0-250MCM PER Ø (CU/AL)	(10.40 - 12.70 mm)
(2)250-350MCM PER Ø (CU/AL)	(12.70 - 15.03 mm)

Service Entrance Ground Lug - Qty. & Cable	
American Wire Gauge (AWG / MCM)	Diameter (mm)
(1)#14-2/0 (CU/AL)	(1.63 - 9.27 mm)
(1)#14-2/0 (CU/AL)	(1.63 - 9.27 mm)
(1)#4-350MCM (CU/AL)	(5.19 - 15.03 mm)
(2)#4-350MCM (CU/AL)	(5.19 - 15.03 mm)
(2)#2-600MCM (CU/AL)	(6.54 - 19.67 mm)

Load Terminals (To Motor)

Qty. & Cable Sizes	
American Wire Gauge (AWG / MCM)	Diameter (mm)
(1)#14-#3 PER Ø (CU)	(1.63 - 5.83 mm)
(1)#4-1/0 PER Ø (CU/AL)	(1.63 - 8.25 mm)
(1)#6-250MCM PER Ø (CU/AL)	(4.11 - 12.70 mm)
(2)1/0-250MCM PER Ø (CU/AL)	(8.25 - 12.70 mm)
(2)2/0-500MCM PER Ø (CU/AL)	(9.27 - 17.96 mm)

For Proper Cable Size Refer to National Electrical Code NFPA-70.

Technical Data and Specifications - DIESEL Plus Diesel Engine Controllers

Line Terminals (Incoming Cables)

Recommended Wire Size	Terminal Number	Distance
I/O Board		
Stranded # 14 (1.63 mm)	11, 34-49, 60-95	N. A.
Stranded # 14 (1.63 mm)	Option Board Terminals	N. A.
Engine Board		
Stranded # 14 (1.63 mm)	1-5, 9, 10, 12, 301, 302, L, N, G	N. A.
Battery Wire		
Stranded # 10 (2.59 mm)	6, 8, 11	0 feet to 25 feet (7.62m)
Stranded # 8 (3.26 mm)	6, 8, 11	25 feet to 50 feet (7.62 - 15.24m)

Dimensions

Standard Enclosure - Type NEMA 2, 3R, (*4, 4X), 12

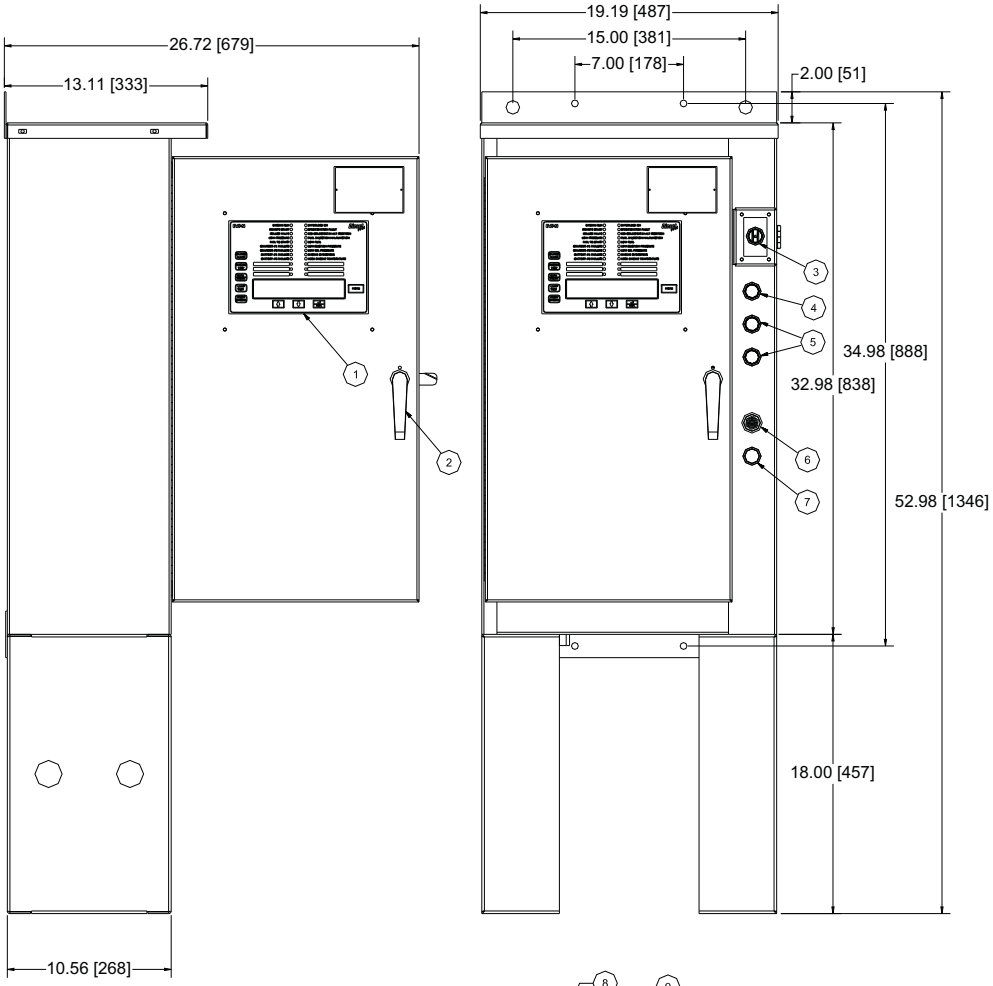

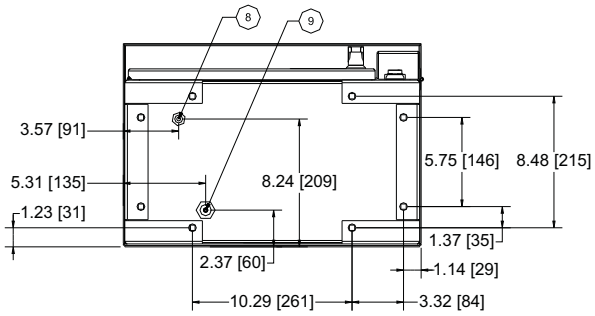

1 - DIESEL PLUS MEMBRANE
2 - LOCKABLE HANDLE
3 - HAND OFF AUTO SELECTOR SWITCH
4 - STOP BUTTON
5 - CRANK BUTTONS
6 - AUDIBLE ALARM
7 - DC FAIL LIGHT
8 - DISCHARGE 1/4" NPT - FEMALE
9 - SENSING LINE 1/2" NPT - FEMALE

Dimensions in Inches and [millimeters].

Approx. Weight Lbs. (Kg)
105 (48)

NOTES:
1. All enclosures finished in FirePump red.
2. Cable Entrance bottom only.
3. Standard Enclosure type NEMA 2, 12
4. Enclosure made from #14 Gauge (0.75) HR Steel.
5. Feet are removable.

* NEMA 4, 4X enclosures are supplied:
With 1/4 Turn latches instead of 3 point handle.

N. Y. C. APPROVED

Fuel Level Switches

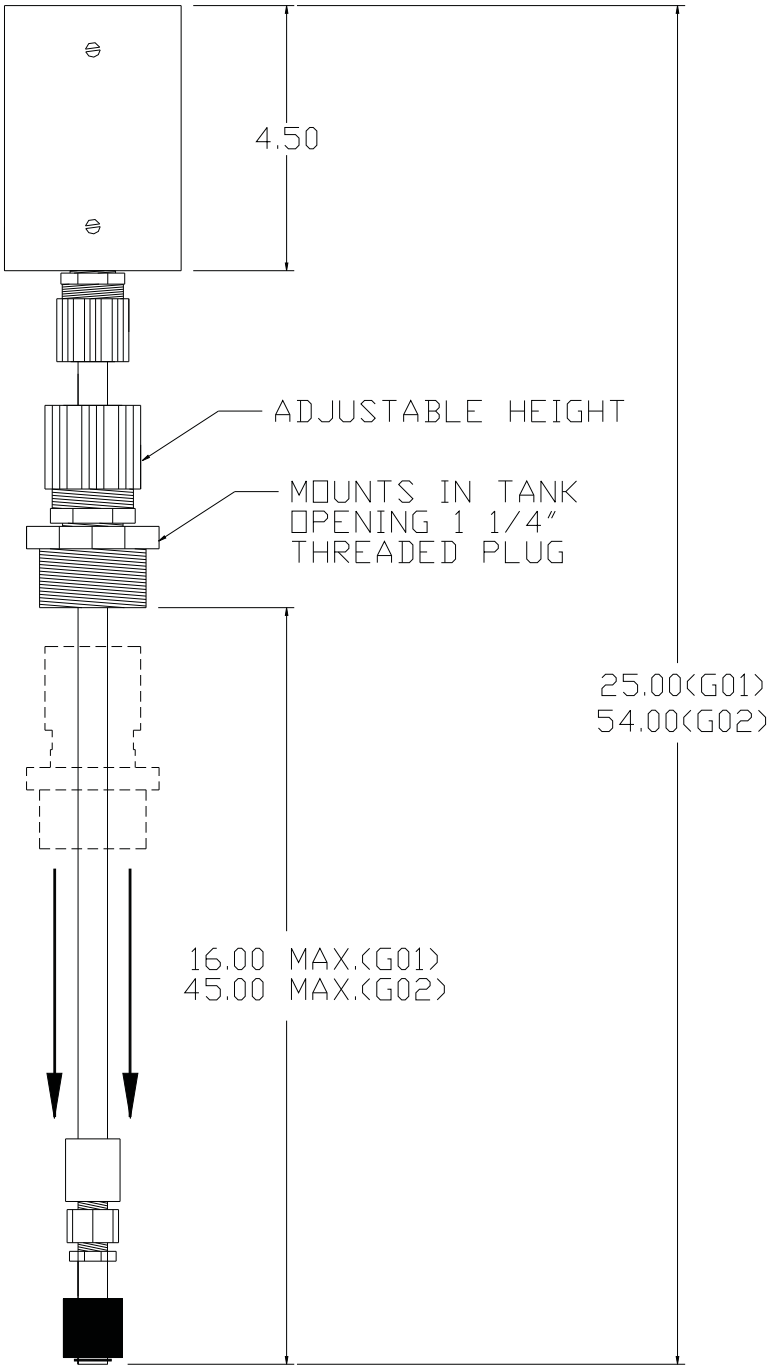

3A14119-G01: 16 inch unit
3A14119-G02: 45 inch unit

Dimensions in Inches.

Part Number / Options Selection Guide
DIESEL Plus - Diesel Engine Controllers

FD120

Language
L1 = English
L2 = French
L5 = Spanish

* Other lanugages available.
Contact factory for details.

DIESEL Plus Options		
380*	-	Supply Voltage (380 - 415V 50/60Hz)
480*	-	Supply Voltage (460 - 480V 60Hz)
600*	-	Supply Voltage (575 - 600V 60Hz)
COM	-	Communications Option
CX	-	Extra Contacts (Two Form-C; Specify Function)
E1	-	NEMA 3R - Raintight Enclosure
E2	-	NEMA 4 - Watertight Enclosure
E3	-	NEMA 12 - Dust Tight Enclosure
E5	-	NEMA 4X - 304 Stainless Steel
E8	-	Tropicalization
E9	-	NEMA 4X - Painted Steel
E10	-	NEMA 4X - 316 Stainless Steel
EX	-	Export Crating
F2	-	Floor Stand - 2 Inch Height
LO	-	Powered Louver Contacts - (1.6 Amp Max)
LO+	-	Powered Louver Contacts - (Up to 8.0 Amp)
LX	-	Extra Light (Specify Description)
Ni	-	Ni Cad Batteries
P7	-	Low Suction Pressure Switch
P8	-	Shutdown (Requires P7 Option)
P10	-	Pressure Transducer - Sea Water
P13	-	Externally Mounted Pressure Transducer
R1	-	Space Heater (120 / 220V)
R2	-	Space Heater c/w Thermostat
R3	-	Space Heater c/w Humidistat
R4	-	Low Room Temperature Switch
R5	-	Space Heater (Internally powered - 120V / 240V)
S1	-	Fuel Level Switch, 16 Inch
S2	-	Fuel Level Switch, 45 Inch
USB	-	Externally Mounted USB Port
X1	-	Printer
X2	-	4 Inch Chart Recorder (10 - 300 psi fresh water)

Note: All controllers are factory set for 12Vdc operation, unless otherwise noted on the purchase order.
* Standard voltage supplied: 110 / 220V 50/60Hz

N. Y. C. APPROVED

May 2011

Diesel Plus Fire Pump Controllers

Typical Specifications

1. Approvals

A. The Fire Pump Controller shall meet the requirements of the latest edition of NFPA 20 as well as meeting CE mark requirements. It shall be listed by [Underwriters Laboratories (UL)] [Underwriters Laboratories of Canada (ULC)] and approved by [Factory Mutual Research (FM)] [Canadian Standards Association (CSA)] [New York Department of Buildings (NYSB)] for fire pump service.

B. The controller shall be [12 volt / 24 volt] negative ground, for use with Diesel Engine, Model manufactured by _____.

2. Construction

A. All internal components shall be front mounted and wired for ease of inspection and maintenance. All relays shall be of the plug-in type, complete with visual indication to show that the relays are energized. The controller shall include an LCD display to indicate battery voltage and amperes as well as system pressure, in PSI or Bars.

B. The controller shall have twin battery chargers meeting NFPA 20 requirements. The battery chargers shall have reverse polarity protection/ indication and be capable of recharging a completely discharged battery within 24 hours. The chargers shall auto detect the input voltage of either 120VAC or 220VAC and shall be able to be programmed for either 12VDC or 24VDC output.

C. The controller shall come standard with a breaker disconnect on the AC line and for both battery connections.

3. Pressure Sensor

A. A solid-state 4-20mA pressure sensor shall be provided. The pressure Start and Stop points shall be adjustable in increments of one (1) PSI. A low pressure pre-alarm, indicated with a flashing green LED, shall denote a potential pump starting condition and will remain lit once the pump has started to indicate the starting cause.

4. Output Relays

A. Two (2) sets of alarm contacts (Form-C) rated at 8A, 220VAC/32VDC, shall be provided for remote indication of:

1. ENGINE RUN (10A)
2. LOW FUEL
3. AUTO MODE
4. COMMON ALARM

B. Two (2) 'FUTURE' relays, each containing two sets of alarm contacts (Form-C) shall be provided. Relays can be be factory set to indicate a specific alarm and shall be field programmable / adjustable to meet future site requirements:

C. The Common Alarm relay shall be energized under normal conditions.

5. Enclosure

A. The controller shall be housed in a NEMA Type 2 (IEC IP11) drip-proof, powder baked finish, freestanding enclosure.

B. Optional Enclosures:

1. NEMA 3R (IEC IP14) rain-tight enclosure.
2. NEMA 4 (IEC IP66) watertight enclosure.
3. NEMA 4X (IEC IP66) watertight 304 stainless steel enclosure.
4. NEMA 4X (IEC IP66) watertight 316 stainless steel enclosure.
5. NEMA 4X (IEC IP66) watertight corrosion resistant enclosure.
6. NEMA 12 (IEC IP52) dust-tight enclosure.

6. Microprocessor Control

A. The following parameters shall be programmable and included as standard:

1. START and STOP PSI points
2. High and Low Pressure Alarm Setpoints
3. STOP MODE: Manual or Auto
4. RUN PERIOD TIMER: 0-60 min
5. AC POWER FAILURE: Enable or Disable
6. SEQUENTIAL START TIMER: 0-300 sec.
7. WEEKLY TEST TIMER
8. PRESSURE DEVIATION: 1-99 PSI
9. LANGUAGE: English/French/Spanish/Other

B. The following visual and audible alarms shall be provided:

FAIL TO START	HIGH ENGINE TEMP.
LOW OIL PRESSURE	ENGINE RUN
ENGINE OVERSPEED	LOW FUEL
BATTERY #1 FAILURE	CHGR #1 FAILURE
BATTERY #2 FAILURE	CHGR #2 FAILURE
REMOTE START	DELUGE VALVE
LOW PRESSURE	INTERLOCK ON
SPEED SWITCH FAULT	LOW SUCTION

ECM SELECTOR IN ALT POSITION
FUEL INJECTOR MALFUNCTION
STARTER #1 FAILURE
STARTER #2 FAILURE
TRANSDUCER FAILURE
DATA CABLE DISCONNECT
DC FAIL

C. The controller shall have a 4 line by 40 character LCD display mounted on a panel opening in the front door. The LCD display shall indicate the following:

1. Main screen displaying system pressure, Battery #1/#2 voltage and amperage, operation mode, shutdown mode, custom messages, alarms, timers, date, and time.
2. Set point review screen displaying the programmed pressure start and stop points, and weekly test time.
3. Controller statistics screen, including:
   a. Powered Time

b. Engine Run Time
c. Number of Calls to Start
d. Number of Starts
e. Last Engine Motor Start Time
f. Last Engine Motor Run Time
g. Last Low Pressure Start
h. Minimum Battery #1 Voltage
i. Maximum Battery #1 Voltage
j. Minimum Battery #2 Voltage
k. Maximum Battery #2 Voltage
l. Minimum System Pressure
m. Maximum System Pressure
n. Last System Startup
o. Last Engine Test
p. Last Low Oil Pressure
q. Last High Engine Temp
r. Last Overspeed
s. Last Fail To Start
t. Last Low Fuel
u. Last Charger Failure
v. Last Battery Failure
w. Last ECM Alarm

4. Controller diagnostics screen, including:
   a. Date & Time
   b. Firmware Version
   c. Shop Order Number
   d. Customer Order Number
   e. Battery Voltage
   f. Internal Board Voltage
   g. Transformer Output Voltage
   h. Current Transformer Outputs
   i. Pressure Transducer Calibrated Settings
   j. Input Status
   k. Relay Status
5. Display last messages screen that will display at least the last 10,000 alarms / messages stored in the controllers' memory.
6. Display up to ten (10) custom messages of up to 100 characters each, which will continually scroll across the fourth line of the display.
7. Remaining time left on active timers.

D. The controller shall be supplied with eleven (11) green status LED's for the following:
   1. Engine Run
   2. Remote Start
   3. Low Pressure
   4. Interlock On
   5. Deluge Valve
   6. Six Programmable LED's (numbered 1 through 6)

E. The controller shall be supplied with thirteen (13) red alarm LED's to indicate the following:
   1. BATTERY #1 FAILURE
   2. BATTERY #2 FAILURE
   3. CHARGER #1 FAILURE
   4. CHARGER #2 FAILURE
   5. SPEED SWITCH FAULT
   6. ECM SELECTOR IN ALT POSITION
   7. FUEL INJECTION MALFUNCTION
   8. LOW SUCTION PRESSURE
   9. FAIL TO START
   10. HIGH ENGINE TEMP.
   11. LOW OIL PRESSURE
   12. ENGINE OVERSPEED
   13. LOW FUEL

F. The microprocessor logic board shall be available with:
   1. A USB port for transference of message history, controller status, diagnostics, and statistics and the ability to update firmware.
   2. An optional Ethernet port for direct connection to a computer for data transfer.
   3. An optional RS485 Serial port for communication to various external software programs.
   4. An optional RS232 Serial Port

G. The controller shall come complete with an embedded web page which allows viewing of the controllers' current status, data values, programmed set points, and downloadable history.

H. A Fail-to-Start alarm shall occur if the engine does not start after the crank cycle.

I. A sequential start timer, weekly test timer and AC Failure Start timer shall be provided as standard.

J. The controller shall be supplied with interlock and shutdown circuits as standard. A flashing green LED shall indicate an interlock on condition.

K. Where shutdown of the pump(s) due to low suction pressure is required, it shall be accomplished without the addition of a separate panel or enclosure. The LCD display shall indicate low suction shutdown. Resetting of the condition shall be automatic or manual as selected by the user.

L. Means shall be provided to test the operation of all LED's to ensure their functionality.

7. Programming Menu

A. The programming menu shall have the ability to enable an entry password.

B. The programming menu shall be limited to two (2) levels of password protection.

C. The controller shall have three (3) languages as a standard, English, French, and Spanish, with the ability to add a fourth language.

D. The programming menu shall be grouped into 5 main menu headings as follows:
   1. Regional Settings
   2. Pressure Settings
   3. Timer Values
   4. Input/Output Menu
   5. System Configuration (password protected)

8. Custom Inputs/Outputs

A. The controller shall come standard with ten (10) future inputs, six (6) future LED indicators, and

two (2) future outputs, with the ability to add up to another 8 outputs via optional relay boards.

B. The user shall be able to program the future inputs/outputs and optional relays through the main programming menu.

C. The inputs shall be selectable based on the following criteria:
   1. User selected message or twenty four (24) predetermined messages.
   2. Energize the common alarm relay when the input is received.
   3. Link to a future relay and/or LED indicator.
   4. Alarm latched until reset.
   5. Normally open or closed input.
   6. On-delay timer.
   7. Energize the buzzer when the input is received.

D. The LED indicators shall be selectable based on the following criteria:
   1. Indication based on a minimum of fourteen (14) predetermined alarms or a custom input.

E. The future relays shall be selectable based on the following criteria:
   1. Output based on a minimum of forty (40) predetermined alarms, controller status or a custom input.
   2. Latched until reset.
   3. Energized under normal conditions.
   4. On or off delay timer on the output.

9. Manufacturer

A. The controller shall be microprocessor based as manufactured by Eaton Corporation.