Programmed with Eaton CONTROL F(x)™ Software to IEC 61131-3 Standard

2nd CAN interface for Gateway Function According to SAE J1939
Supply Voltage 10...32 V DC

Technical Data	Controller for the Implementation of a Central or Decentralized Electrohydraulic System
Housing	closed screened metal housing with flange fastening
Dimensions (H x W x D)	153 x 132 x 43 mm
Mounting	by means of 4 M5 x L screws to DIN 7500 or DIN 7984 mounting position horizontal or vertical to the mounting wall
Connection	55-pin connector, latched, protected against reverse polarity type AMP housing or Framatome AMP junior timer contacts, crimp connection 0.5/2.5 mm^2
Weight	0.95 kg
Inputs Can be configured as	8 4 digital; for positive sensor signals (low side); NAMUR; with diagnostic capability incl. 2 pulse inputs (max. 50 kHz) 4 analog; 0...10/32 V DC or 0/4...20 mA
Outputs Can be configured as Switching current per output Total current of all outputs	4 digital, positive switching (high side) PWM (PWM frequency 20...250 Hz) current-controlled (0.1...4 A) max. 4 A max. 16 A
Operating voltage UB Overvoltage Reset in case of undervoltage Auto save	10...30 V DC 36 V for t ≤ 10 s at UB ≤ 9.5 V at UB ≤ 9.0 V
Current consumption	≤ 160 mA (without external load)
Housing temperature	– 40...85°C (depending on the load)
Storage temperature	– 40...85°C
Protection	IP 67 (for inserted plug with individually sealed cores e.g. ECEFX16 12S)
CAN interface 1 Baud rate Communication profile	CAN interface 2.0 B, ISO 11898 50 Kbits/s...1 Mbits/s (default setting 125 kBits/s) CANopen, CiA DS 301 version 3.0, CiA DS 401 version 1.4
CAN interface 2 Baud rate Communication profile	CAN interface 2.0 A/B, ISO 11898 50 Kbits/s...500 Kbits/s (default setting 125 kBits/s) SAE J1939
Serial interface Baud rate Topology Protocol	RS 232 C 9.6 Kbits/s, 19.2 Kbits/s, 28.8 Kbits/s point-to-point (max. 2 participants); master/slave connection predefined protocol (INTELHEX)
Node ID (default)	hex 20 (= dec. 32)

Abbreviations:

A = analog
BH = binary high side
BL = binary low side
CAN_H = CAN interface
CAN_L = CAN interface
CYL = inputs for time period measurement
FRQ = frequency inputs
PWM = pulse-width-modulated signals
RxD = serial interface (data received)
TxD = serial interface (data transmitted)
VBB_0 = supply voltage outputs
VBB_S = supply voltage sensors/module
%IWx = IEC address for analog input
%IX0.xx = IEC address for binary input
%QX0.xx = IEC address for binary output

Powering Business Worldwide

EFX1612m	Technical Data
Processor	CMOS microcontroller 16 bits C167C, pulse frequency 20 MHz
Device monitoring	undervoltage monitoring, watchdog function, check sum test for program, and system monitoring for excess temperature
Program memory	192 Kbytes flash, can be used by the user
Data memory	64 Kbytes SRAM, 32 Kbytes flash, 3 Kbytes EEPROM
Data memory (protected in case of power failure)	256 bytes (auto save memory)
Status LED	two-color LED (red/green)

Operating status (status LED)

During the start-up or reset of the controller, the green and red LEDs light simultaneously, making the status LED appear orange in color.

LED Color	Status	Description
–	constantly off	no supply voltage
orange	for a short time on	initialization or reset checks
green	5 Hz	no operating system loaded
green	2.0 Hz constantly on	run stop
red	2.0 Hz constantly on	run with error fatal error or stop with error

Electrical connection

To guarantee the electrical interference protection of the controller, the housing must be connected to the ground of the vehicle!

Designation	Pin Number	Potential
supply voltage	23	10...32 V DC (VBB_S)
supply voltage outputs	05	10...32 V DC (VBB_0)
ground	01	GND_S
CAN interface 1	14/51 32/50 33/15	CAN_H CAN_L CAN_GND
CAN interface 2	42/43 44/45 26/31	CAN_H CAN_L CAN_GND
RS 232 interface (programming)	07 (TxD) 06 (RxD) 13 (GND)	pin 02, PC D-Sub (9 pins) pin 03, PC D-Sub (9 pins) pin 05, PC D-Sub (9 pins)
"TEST" input programming mode operating mode	 24 24	 10...32 V DC (VBB_S) open

EFX 1612m	Characteristics of the Inputs/Outputs
Digital inputs (%IX0.0 / 0.8 / 1.0 / 1.8) Can be configured as ...	■ Digital inputs for positive switching sensor signals switch-on level 0.7 U_B switch-off level 0.4 U_B input resistance 2.86 kΩ input frequency 50 Hz ■ NAMUR inputs; digital inputs with diagnostic capability when used with NAMUR sensors, supply voltage 5...25 V, input resistance 2.86 kΩ input frequency 50 Hz ■ Diagnostic inputs (analog evaluation), digital inputs with diagnostic capability when an external resistor connection is used, corresponds to the NAMUR input input resistance 2.86 kΩ input frequency 50 Hz ■ Frequency inputs; with diagnostic capability, evaluation with integrated comparator is used, corresponds to input frequency 1 100 Hz...50 kHz (IN 0) input frequency 2 100 Hz...50 kHz (IN 1) input resistance 2.86 kΩ
Analog inputs (%IW6...%IW9) Can be configured as ...	■ Voltage inputs input voltage 0...10/32 V resolution 10 bit input resistance 50 kΩ input frequency 50 Hz ■ Current inputs input current 0/4...20 mA resolution 10 bit input resistance 400 Ω input frequency 50 Hz
Outputs (%QX0.0 / 0.8 / 1.0 / 1.8) Can be configured as ...	■ Semi conductor outputs, positive switching (high side), short-circuit and overload protected switching voltage 10...32 V DC switching current max. 4 A; total current max. 16 A ■ PWM outputs; with diagnostic capability PWM frequency max. 250 Hz PWM pulse ratio 1...99 % resolution depending on the PWM frequency switching current max. 4 A; total current max. 16 A integrated pull-down resistor (4.7 kΩ) ■ Current-controlled outputs; with diagnostic capability switching current 0.1...4 A; total current max. 16 A setting resolution 1 mA control resolution 5 mA accuracy ± 2% FS
Input "TEST"	During the test mode (e.g. programming), the "TEST" connection must be connected to UB. For the "RUN" mode, the input must not be connected. Input resistance 12 kΩ
	Test Standards and Regulations
Humidity test to IEC 68-2-30	≤ 90 % rel. humidity, non-condensing
Mechanical resistance	vibration to IEC 68-2-6, shock to IEC 68-2-27, bump to IEC 68-2-29
Immunity to conducted interference	to DIN 40839/part 1, pulses 1, 2, 3a, 3b (corresponds to ISO 7637) severity level 4, function state C, A to DIN 40839/part 1, pulses 5 (corresponds to ISO 7637) severity level 1, function state C to DIN 40839/part 3, pulses 1, 2, 3a, 3b (corresponds to ISO 7637) severity level 4, function state A
EC declaration of conformity **Immunity to interfering fields** **Interference emission**	according to directive EMC 89/336/EEC and LV 73/23/EEC to EN 61000-6-2: 2001, at 100 V/m to EN 61000-6-4: 2001
e1 type approval	according to directive 72/245/EWG, supplemented by directive 2006/28/EG
Railway specification	according to guideline BN 411 002 (DIN EN 50155, part 10.2)

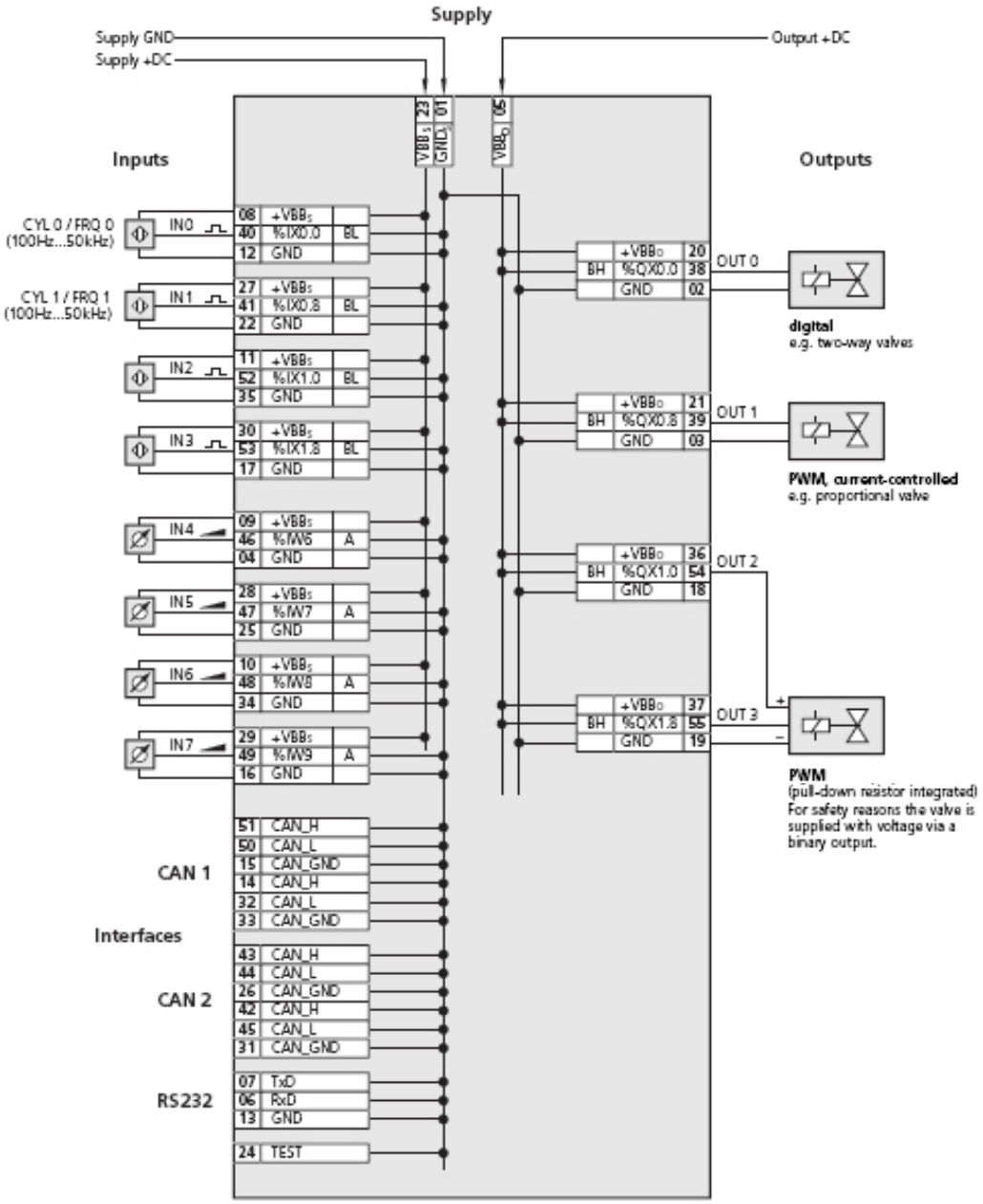
Supply
Supply GND
Supply +DC
Output +DC
Inputs
Outputs
CYL 0 / FRQ 0 (100Hz...50kHz)
CYL 1 / FRQ 1 (100Hz...50kHz)
IN0
IN1
IN2
IN3
IN4
IN5
IN6
IN7
OUT 0
OUT 1
OUT 2
OUT 3
digital
e.g. two-way valves
PWM, current-controlled
e.g. proportional valve
PWM
(pull-down resistor integrated)
For safety reasons the valve is supplied with voltage via a binary output.
CAN 1
Interfaces
CAN 2
RS232

Eaton
Hydraulics Group USA
14615 Lone Oak Road
Eden Prairie, MN 55344
USA
Tel: 952-937-9800
Fax: 952-294-7722
www.eaton.com/hydraulics

Eaton
Hydraulics Group Europe
Route de la Longeraie 7
1110 Morges
Switzerland
Tel: +41 (0) 21 811 4600
Fax: +41 (0) 21 811 4601

Eaton
Hydraulic Group Asia Pacific
11th Floor Hong Kong New
World Tower
300 Huaihai Zhong Road
Shanghai 200021
China
Tel: 86-21-6387-9988
Fax: 86-21-6335-3912

Powering Business Worldwide

© 2011 Eaton Corporation
All Rights Reserved
Printed in USA
Document No. E-ELCL-MS003-E
July 2011