C4411 Remote Display Installation Guide

Type 1 and 12 Applications

Step 1 — Enclosure Preparation

Drill or punch two 30mm pilot device holes on 1.75-inch centers a minimum of 1.60 inches (40.6 mm) from every door gasket.

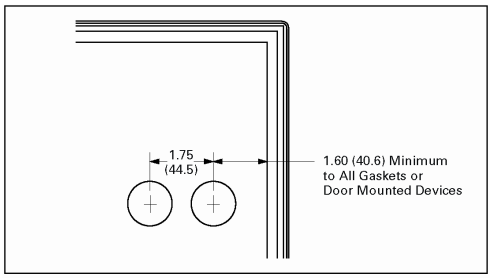

FIGURE 1. PILOT DEVICE HOLES — INCHES (MM)

Step 2 — Mounting the Remote Display

- Insert remote display through the door and add two gaskets provided behind the door (see **Figure 2**).
- Orient strain relief bracket with respect to your chosen cable routing.
- Add two jam nuts provided and tighten 30mm pilot device tool (E22CW recommended) until the strain relief bracket is flush with the enclosure door, tighten an additional 1/2 of a turn.

Step 3 — Connecting the Remote Display

- Select cable up to 10 feet long from **Table 1** below and route cable to Motor Insight™, installing communications filter provided with C4411 following the instructions in **Figure 3**.

TABLE 1.

CATALOG NUMBER	LENGHT INCHES	LENGHT METER
D77E-QPIP25	9.8	0.25
D77E-QPIP100	39.4	1.0
D77E-QPIP200	78.7	2.0
D77E-QPIP300	118.1	3.0

- Secure cable to the strain relief bracket using any suitable tie wrap.

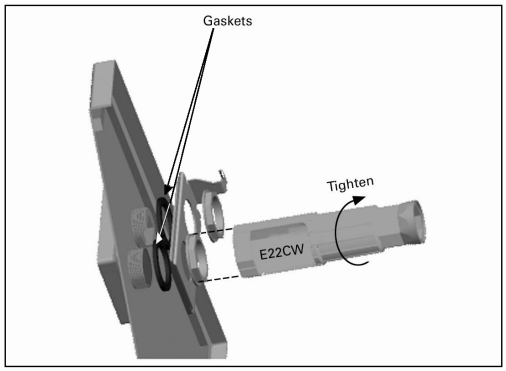

FIGURE 2. DOOR CUT AWAY FOR CLARITY

Locate the common mode communication filter. Open the shell and insert (1) complete loop. Close and snap the shell shut. See **Figure 3**. The filter is to be located as close to the Motor Insight overload relay as possible.

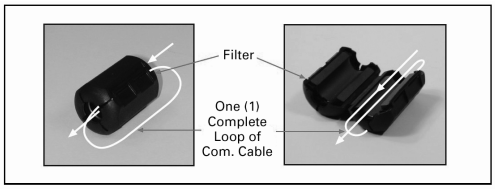

FIGURE 3. COMMON MODE FILTER INSTALLATION

Powering Business Worldwide

Type 1/12 Remote Display Conversion to 3R Applications

For 3R applications, install 3R kit C4413 as follows:

1. Loosen the captive screw in C4413 enclosure assembly and remove cover.
2. Insert User Interface into the base of the 3R enclosure provided and through the holes as prepared in Step 1 above for Type 1/12 installations (**Figure 4**).
3. Follow Steps 2 and 3 from Type 1/12 installation instructions above.
4. Insert cover into cam slots **Figure 5** and pull cover forward and down, (**Figure 6**) torque screw 12-15 in-lb

Note: Provisions are made for two 3/8" shackle locks to prevent tampering from unauthorized personnel.

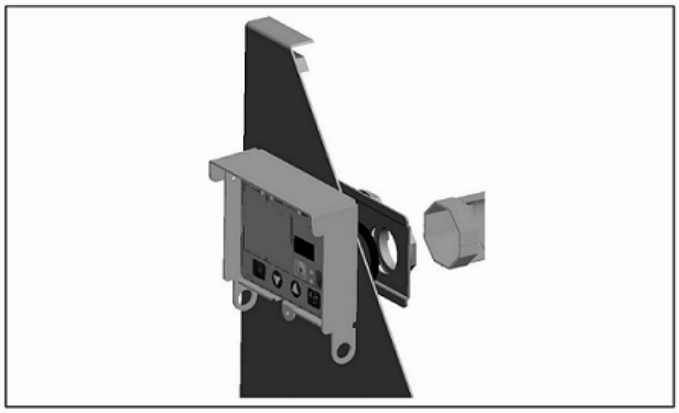

FIGURE 4.

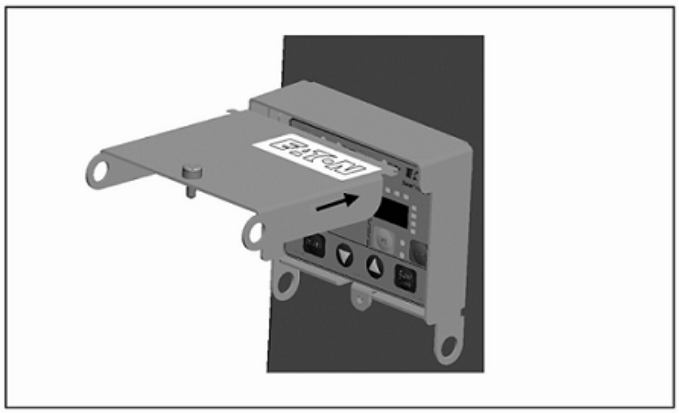

FIGURE 5.

FIGURE 6.

Eaton Corporation
Electrical Sector
1000 Cherrington Parkway
Moon Township, PA 15108
United States
877-ETN-CARE (877-386-2273)
Eaton.com

© 2008 Eaton Corporation
All Rights Reserved
Printed in USA
Publication No. IL04209003E
July 2010 Rev.002

Powering Business Worldwide

PowerChain Management®

PowerChain Management is a registered trademark of Eaton Corporation.

All other trademarks are property of their respective owners.