Sag Ride Through device for providing facility uptime

Eaton's Sag Ride Through (SRT) is a high-performance, inverter-based voltage conditioning device developed to provide protection to sensitive loads against commonly occurring voltage sags. The SRT monitors the incoming supply voltage and when it deviates from the nominal voltage level, the SRT achieves voltage conditioning by injecting the appropriate correction voltage in series with the power supply. The SRT provides an extremely fast reaction time and subcycle response to sag events that would otherwise cause loads to drop out.

The SRT is designed for low voltage systems (600 to 208V, three-phase), and is also offered in medium voltage applications from 25 kVA to 4 MVA. Installation is simple, and the SRT provides customers with a new solution to improve productivity and reduce downtime for sag-related problems.

Powering Business Worldwide

Industries and applications affected by sags

Key industries

- Semi-conductor manufacturers
- Communications
- Steel mills
- Petroleum and chemical processing
- Health care
- Paper mills
- Automotives
- Textile
- Printing
- Plastics

Equipment or processes

- Manufacturing process controllers
- Variable speed drives
- Robotics
- Motor conductor
- Telephone systems
- HID lighting
- HVAC controls
- Medical equipment
- Computers

The SRT meets the stringent requirements of the SEMI-F47 standard; a key requirement for sag correction in the semi-conductor industry.

Continuous sag regulation

The SRT is an active voltage conditioner. This means it will constantly respond to voltage sags in the –10% range with a regulated output in ±1% range. The SRT can be applied to the main service entrance, at branch locations or in front critical loads. Eaton's SRT provides an outstanding return on investment. It delivers operation productivity that is just not possible with traditional tap switching or ferroresonant technologies.

The SRT consists of a voltage source inverter, bypass circuit and an injection transformer connected in series between the incoming utility supply and the load (see diagram below).

Sag correction using the SRT

Eaton's SRT power conditioner prevents expensive, electrical downtime. It is a state-of-the-art solution to today's power conditioning challenges.

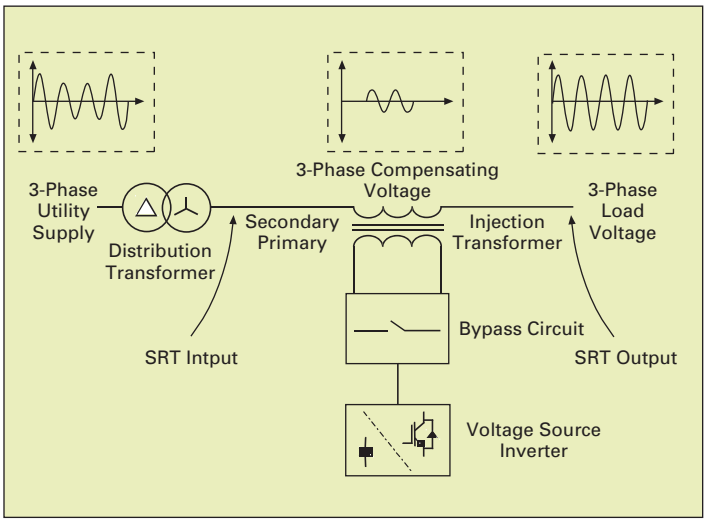

Block Diagram of the SRT Active Voltage Conditioner

SRT features and specifications

Features	Specifications
Load Capacity	
Capacity (kVA)	70–4 MVA (as specified per model)
Displacement power factor of connected load	0–1, leading or lagging
Crest factor for rated kVA	1.63 at 100% of rated load for continuous operation (including up to 10% voltage correction)
Overload—30 seconds	150% with up to 10% of voltage correction
Input Supply	
Nominal supply voltage	208/480/600V, 60 Hz, three-phase, three-wire plus ground (higher system voltages supplied to requirement)
Maximum supply voltage	110% of nominal supply voltage
Minimum three-phase supply voltage – Running – Starting [1]	 50% of nominal supply voltage 75% of nominal supply voltage
Minimum single-phase-to-ground supply voltage [2] – Running – Starting [1]	 25% of nominal supply voltage 63% of nominal supply voltage
Efficiency of system	98–99%
Output Supply	
Nominal voltage (V)	208/480/600V, 60 Hz, three-phase, three-wire plus ground (higher system voltages supplied to requirement)
Three-phase balanced correction	+30% for at least 30 sec.
Single-phase-to-ground correction [2]	+45% for at least 30 sec.; +10% continuous three-phase correction (all models) (consult Eaton for specialist correction requirements)
Voltage regulation	±1% up to 10% continuous three-phase correction ±2.5% at 30% three-phase correction
Response (to sag event)	Initial sag correction applied within 1 ms, remainder over the next cycle
Bypass	
Nominal power	SRT rating (kVA)
Maximum overload capacity (in bypass): – For 10 minutes (%) – For 1 minute (%) – For 600 ms (%) – For 100 ms (%) Transfer time [3] – Inverter to bypass (ms) – Bypass to inverter (ms)	 125 150 700 1000 <0.5 <40–750
Environmental	
Operating temperature	0–40°C; 50°C maximum with 20% load derating
Cooling	Forced ventilation
Capacity derating with elevation	–1.2% every 100m above 1000m
Humidity	< 95%, noncondensing
Warranty	1 year

[1] If SRT has tripped (offline) due to below threshold input voltages, it cannot be restarted until the system voltage is at least this % of the nominal.

[2] Single-phase-to-ground fault occurring on the utility side of a delta-wye distribution transformer.

[3] The SRT provides continuous correction and only transitions to and from bypass when manually starting and stopping, or under fault or overload conditions. The transition from bypass to inverter takes up to 750 ms. The autoresettable bypass mode of operation includes an additional 5-second delay, allowing time for the fault to clear.

Dimensions

kVA	Height x Width x Depth in Inches (mm)
SRT Enclosure	
25 50 75	24.00 x 24.00 x 36.00 (609.6 x 609.6 x 914.4) 24.00 x 24.00 x 36.00 (609.6 x 609.6 x 914.4) 24.00 x 24.00 x 36.00 (609.6 x 609.6 x 914.4)
175 250 350	49.21 x 25.60 x 39.37 (1249.9 x 650.2 x 1000.0) 49.21 x 25.60 x 39.37 (1249.9 x 650.2 x 1000.0) 77.17 x 47.24 x 32.28 (1960.1 x 1200.0 x 819.9)
500 650 1000	77.17 x 55.12 x 32.28 (1960.1 x 1400.0 x 819.9) 77.17 x 55.12 x 32.28 (1960.1 x 1400.0 x 819.9) 77.17 x 62.99 x 32.28 (1960.1 x 1599.9 x 819.9)
1250 1500 2000	77.17 x 70.87 x 32.28 (1960.1 x 1800.1 x 819.9) 77.17 x 78.74 x 32.28 (1960.1 x 2000.0 x 819.9) 77.17 x 86.61 x 32.28 (1960.1 x 2200.0 x 819.9)
Separate Transformer (Above 175 kVA)	
250 350	31.50 x 31.50 x 31.50 (800.1 x 800.1 x 800.1) 39.37 x 39.37 x 39.37 (1000.0 x 1000.0 x 1000.0)
500 650 1000	39.37 x 39.37 x 39.37 (1000.0 x 1000.0 x 1000.0) 47.24 x 39.37 x 39.37 (1200.0 x 1000.0 x 1000.0) 47.24 x 47.24 x 39.37 (1200.0 x 1200.0 x 1000.0)
1250 1500 2000	59.06 x 59.06 x 51.18 (1500.1 x 1500.1 x 1300.0) 59.06 x 59.06 x 51.18 (1500.1 x 1500.1 x 1300.0) 59.06 x 59.06 x 51.18 (1500.1 x 1500.1 x 1300.0)

Weight

kVA	Lbs	kg
25 50 75	330 396 551	150 180 250
175 250 350	1101 661, 881 1542, 1542	500 300, 400 700, 700
500 650 1000	1982, 2203 2093, 2863 2423, 3304	900, 1000 950, 1300 1100, 1500
1250 1500 2000	2753, 3744 3084, 4185 3634, 4626	1250, 1700 1400, 1900 1650, 2100

Airflow

kVA	ft^3/min	m^3/min
25 50 75	71 71 71	2 2 2
175 250 350	141 212 212	4 6 6
500 650 1000	424 424 635	12 12 18
1250 1500 2000	847 1059 1271	24 30 36

Note: For mechanical bypass option, refer to factory. Paired values in the weight column correspond to the mass of the SRT unit followed by the mass of the external transformer arrangement.

SRT ordering guidelines for standard unit at 30% correction

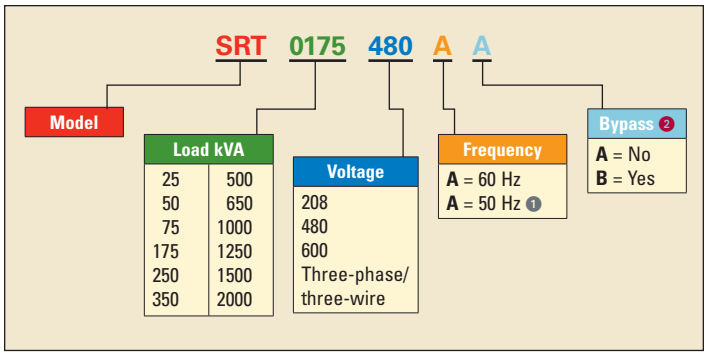

[1] For 50 Hz international applications, consult Eaton.
[2] Optional mechanical bypass—refer to Eaton for details.

Eaton Corporation
Electrical Sector
1111 Superior Ave.
Cleveland, OH 44114
United States
877-ETN-CARE (877-386-2273)
Eaton.com

© 2010 Eaton Corporation
All Rights Reserved

Printed in USA
Publication No. PA01002002E / Z10471
October 2010

Powering Business Worldwide

PowerChain Management®

PowerChain Management is a registered trademark of Eaton Corporation.

All other trademarks are property of their respective owners.