Programmed with Eaton CONTROL F(x)™ Software

32-Bit Processor, 32 (16 Inputs/16 Outputs), 4 CAN Interfaces
Supply Voltage 10...32 V DC

Technical Data	Controller as a Black-Box System To Implement a Central or Decentralized System Design
Housing	closed, screened metal housing with flange fastening
Dimensions (H x W x D)	153 x 226 x 43 mm
Installation	screw connection by means of 4 M5 x L screws to DIN 7500 or DIN 7984 mounting position horizontal or vertical to the mounting wall
Connection	1 55-pin connector, latched, protected against reverse polarity, type AMP or Framatome AMP junior timer contacts, crimp connection 0.5/2.5 mm²
Weight	1.2 kg
Housing/storage temperature	– 40...85°C (depending on the load) / – 40...85°C
Protection rating	IP 67 (only if sealing plugs have been properly installed in the connector)
Input/output channels	32 (16 inputs/16 outputs)
Inputs	configurable digital for positive/negative sensor signals, positive with diagnostic capabilities analog (0...10/32 V, 0...20 mA, ratiometric) frequency (≤ 30 kHz)
Outputs	configurable digital positive/negative switching (high/low side) PWM output (20...250 Hz, 8 x max. 4 A, 8 x max. 2 A) current-controlled (8 x 0.02...4 A, 8 x 0.01...2 A)
Operating voltage Overvoltage Undervoltage detection Switching-off in case of undervoltage	10...32 V DC 36 V for t ≤ 10 s at U_B ≤ 10 V at U_B ≤ 8 V
Reverse polarity protection	yes
Current consumption	≤ 160 mA (without external load at 24 V DC)
CAN interfaces 1...4 Baud rate Communication profile	CAN interface 2.0 A/B, ISO 11898 50 Kbits/s...1 Mbits/s (default 125 Kbits/s) CANopen, CiA DS 301 version 4, CiA DS 401 version 1.4 or SAE J 1939 or free protocol
Serial interface Baud rate Topology Protocol	RS-232 C 9.6...115.2 Kbit/s (default 115.2 Kbits/s) point-to-point (max. 2 participants); master-slave connection predefined protocol (INTELHEX)
Virtual COM port	USB, max. 1 MBaud
Processor	32-bit CPU Infineon TriCore 1796
Device monitoring	undervoltage monitoring watchdog function checksum test for program and system excess temperature monitoring

Powering Business Worldwide

Celebrating 100 YEARS
Ideals that Endure

Process monitoring concept	second switch-off mode for 8 outputs each via monitoring relays		
Memory (usable)	Program Memory	Flash	1.25 Mbytes
	Data memory	RAM	256 Kbytes
		FRAM (via FB)	16 Kbytes
		FRAM	32 Kbytes
	Data memory (retain data)	FRAM	2 x 4 Kbytes
Status indication	three-color LED (R/G/B)		
Operating states	**LED Color**	**Status**	**Description**
	–	out	no operating voltage
	yellow	1 x on	initialization or reset checks
	orange	on	error in the start-up phase
	green	5 Hz	no operating system loaded
		2.0 Hz	run
		on	stop
	red	2.0 Hz	run with error
		on	fatal error or stop with error
Test standards and regulations	Climatic test		• damp heat to EN 60068-2-30, test Db (≤ 95% rel. humidity, non-condensing) • salt mist test to EN 60068-2-52, test Kb, severity level 3 • degree of protection test to EN 60529
	Mechanical stability		• vibration to EN 60068-2-6, test Fc • bump to EN 60068-2-29, test Eb • random vibration to EN 60068-2-64, test Fh
	Immunity to conducted interference		• to ISO 7637-2: 2004, pulses 2a, 3a, 3b, severity level 4, function state A • to ISO 7637-2: 2004, pulse 1, 2b, severity level 4, function state C • to ISO 7637-2: 2004, pulse 5, severity level 3, function state C
	Immunity to interfering fields		• to directive 2006/28/EC at 100 V/m (e1 type approval) • EN 61000-6-2: 2005 (CE)
	Interference emission		• to directive 2006/28/EC (e1 type approval) • EN 61000-6-4: 2007 (CE)
	Tests for approval for railway applications		• to BN 411 002 (DIN EN 50155 clause 10.2)
Characteristics of the inputs	Resolution	12 bits	
	Accuracy	± 1 % FS	
	Measuring ranges	0...10 V, 0...30 V, 0...20 mA, ratiometric	
Current input 0...20 mA (A)	Input resistance	390 Ω	
	Input frequency	50 Hz/1 kHz (selectable via software)	
Voltage input 0...10 V (A)	Input resistance	65.6 kΩ	
	Input frequency	50 Hz/1 kHz (selectable via software)	
Voltage input 0...32 V (A)	Input resistance	50.7 kΩ	
	Input frequency	50 Hz/1 kHz (selectable via software)	
Voltage input ratiometric (A)	Input resistance	50.7 kΩ	
	Input frequency	50 Hz/1 kHz (selectable via software)	
Frequency input (FRQ)	Input resistance	3.2 kΩ	
	Input frequency	≤ 30 kHz	
	Switch-on level	> 0.35...0.48 U_B	
	Switch-off level	< 0.29 U_B	
	Function block	Frequency, Period, Inc_Encoder	
Digital input ($B_{L/H}$)	Input resistance	3.2 KΩ	
	Input frequency	50 Hz/1 kHz (selectable via software)	
	Switch-on level	> 0.7 U_B	
	Switch-off level	< 0.3 U_B	
	Diagnosis wire break	> 0.95 U_B	
	Diagnosis short circuit	< 1 V	

Test input	During the test mode (e.g. programming), the connector pin must be connected to VBB_S (10...32 V DC). During the "RUN" mode, the test input must not be connected.	
NAMUR inputs	Digital inputs with diagnostic capabilities can be used as NAMUR inputs when used with an external resistor wiring. Supply voltage 5...25 V	
Characteristics of the outputs	Accuracy Protective circuit for inductive loads Diagnosis via current feedback	± 2 % FS integrated wire break/short circuit
PWM output (PWM)	Output frequency Pulse/pause ratio Resolution Switching current	20...250 Hz (per channel) 1...1000 ‰ 1 ‰ 8 x 0.01...2 A / 0.02....4 A 8 x 0.01...2 A (4 of these outputs with H-bridge function)
Digital output (B_H and $B_{H/L}$)	Switching voltage Switching current	10...32 V DC 8 x ≤ 2 A 8 x ≤ 4 A (4 of these outputs with H-bridge function)
Current-controlled output (PWM_I)	Output frequency Control range Setting resolution Control resolution Load resistance	20...250 Hz (per channel) 8 x 0.01...2 A / 0.02....4 A 8 x 0.01...2 A 1 mA 1/2 mA ≥ 3 Ω (at 12 V DC) ≥ 6 Ω (at 24 V DC)
Reference voltage V_{REF} OUT	for sensors and joysticks 5/10 V, 400 mA short-circuit proof and overload protected (10 V reference only from a supply voltage U_B ≥ 13 V)	

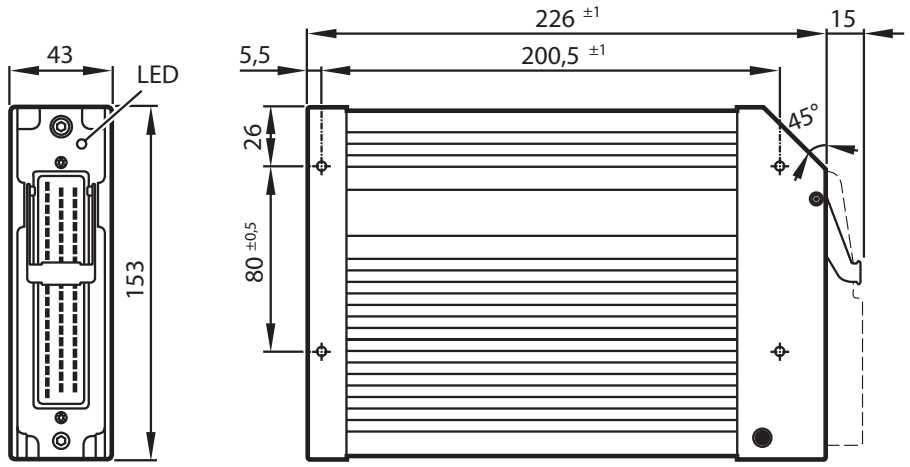

Wiring

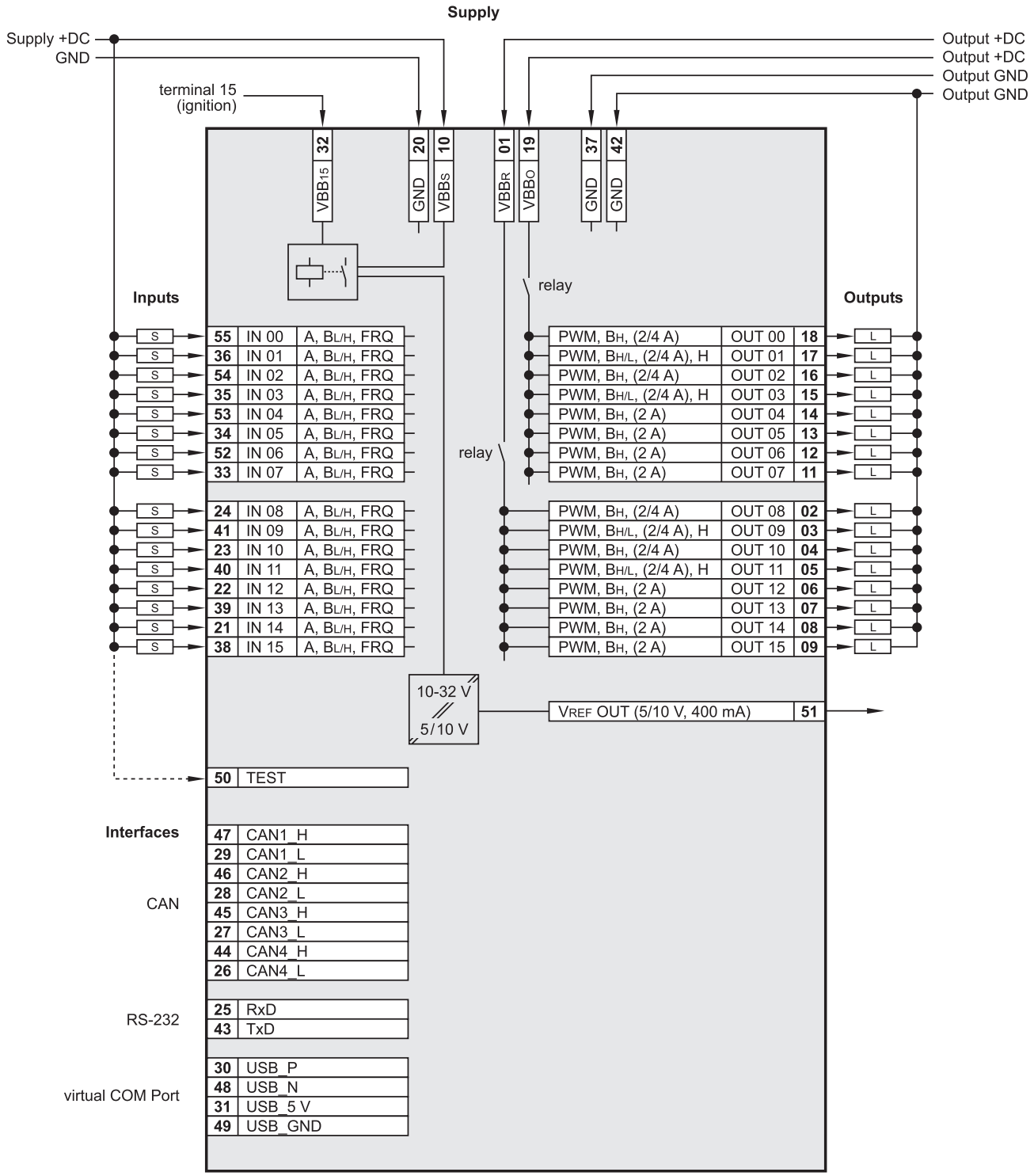

Abbreviations

A	= analog
B_H	= binary high side
B_L	= binary low side
FRQ	= frequency/pulse inputs
H	= H-Bridge function
PWM	= pulse width modulation
VBB_0	= supply outputs
VBB_S	= supply sensors/module
VBB_R	= supply via relay

Eaton
Hydraulics Group USA
14615 Lone Oak Road
Eden Prairie, MN 55344
USA
Tel: 952-937-9800
Fax: 952-294-7722
www.eaton.com/hydraulics

Eaton
Hydraulics Group Europe
Route de la Longeraie 7
1110 Morges
Switzerland
Tel: +41 (0) 21 811 4600
Fax: +41 (0) 21 811 4601

Eaton
Hydraulics Group Asia Pacific
Eaton Building
4th Floor, No. 3 Lane 280 Linhong Rd.
Changning District
Shanghai 200335
China
Tel: (+86 21) 5200 0099
Fax: (+86 21) 5200 0400

Powering Business Worldwide

© 2011 Eaton Corporation
All Rights Reserved
Printed in USA
Document No. E-ELCL-TH001-E
May 2011