Video Instruction Available
Instructional videos are available for download at no charge at roadranger.com

Videos are also available for purchase. To order, call 1-888-386-4636. Ask for item # RRSD0002

Fuller Mid-Range Transmissions TRDR0100

October 2007

EATON
Powering Business Worldwide

BACKED BY
Roadranger
SUPPORT

Reference Numbers

Transmission model designation and other transmission identification information are stamped on the transmission tag. To identify the transmission model designation and serial number, locate the tag on the transmission and then locate the numbers as shown.

DO NOT REMOVE OR DESTROY THE TRANSMISSION IDENTIFICATION TAG.

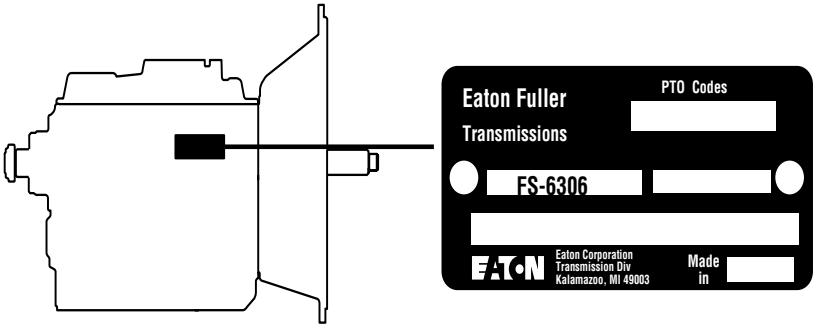

The blank spaces provided below are for recording transmission identification data. Have these reference numbers handy when ordering replacement parts or requesting service information:

Transmission Model _____

Transmission Serial Number _____

Table of Contents

WARNING 4

Model Designations 5

Shift Lever Positions 6

General Information 7

Operation

- Driving Tips 8
- Initial Start-Up 9
- Upshifting 10
- Downshifting 11

Lubrication 12-15

Preventive Maintenance 16-17

Every effort has been made to ensure the accuracy of all information in this brochure. However, Eaton Transmission Division makes no expressed or implied warranty or representation based on the enclosed information. Any errors or omissions may be reported to Training and Publications, Eaton Transmission Division, P.O. Box 4013, Kalamazoo, MI 49003.

⚠ WARNING

Read the entire driver instructions before operating this transmission.

Before starting a vehicle always be seated in the driver's seat, move the shift lever to neutral, and set the parking brakes.

Before working on a vehicle or when leaving the cab with the engine running, place the transmission in neutral, set the parking brakes, AND block the wheels.

When parking the vehicle or leaving the cab, always place the shift lever in neutral and set the parking brakes.

TOWING: To avoid damage to the transmission during towing, place the transmission in neutral and lift the drive wheels off the ground or disconnect the driveline.

Model Designations

Nomenclature:

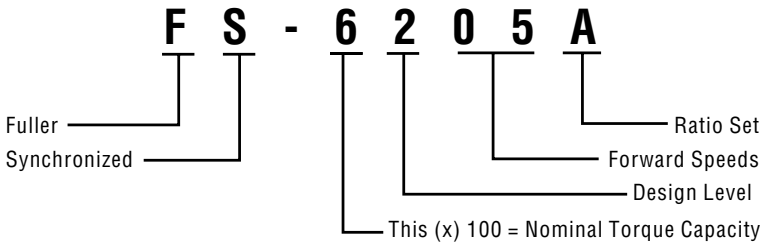

Shift Lever Positions

Synchro-5

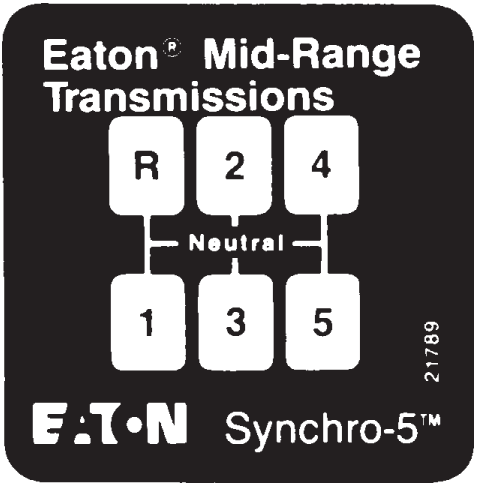

General Information

Models in this series provide five forward speeds and one reverse, and are shifted as you would shift any synchronized manual transmission. Follow the simple 5-speed shift pattern.

Shift Pattern Diagram

A shift pattern diagram should be in your vehicle. If it has been lost, a replacement may be obtained by writing to:

Eaton Corporation
Transmission Division
Marketing Communications
P.O. Box 4013
Kalamazoo, Michigan 49003

Please specify shifting controls used and transmission model number when making request.

Driving Tips

- Always use the clutch when making upshifts or downshifts. Premature synchronizer failure can result from not using the clutch.
- Always select an initial starting gear that provides sufficient reduction for the load and terrain.
- Never slam or jerk the shift lever to complete gear engagements.
- Never coast with the shift lever in the neutral position.
- Never downshift at too high of a road speed.

Operation

Initial Start-Up

⚠ WARNING

Before starting a vehicle always be seated in the drivers seat, move the shift lever to neutral, and set the parking brakes.

⚠ CAUTION

Before moving a vehicle, make sure you understand your shift pattern configuration. Somewhere in the vehicle's cab should be a shift label similar to the ones on pages 6. If not, refer to page 7 to order one.

1. Make sure the shift lever is in neutral and the parking brakes are set.
2. Turn on the key switch, start the engine.
3. Apply the service brakes.
4. Depress the clutch pedal to the floor.
5. Move the shift lever to desired initial gear.
6. Release the parking brakes on the vehicle.
7. Slowly release the clutch pedal and apply accelerator.

Operation

In the following instructions, it is assumed that the driver is familiar with operating heavy-duty trucks and tractors, and can coordinate the shift lever movement and clutch pedal to make smooth gear engagements while upshifting or downshifting.

Upshifting

1. Depress the clutch pedal, move the shift lever to next desired speed.
2. Release the clutch pedal.
3. Accelerate.
4. Continue upshifting.

Downshifting

NOTE: Although the transmission's first gear is synchronized it is advised that a downshift into first gear be completed at a very slow vehicle speed to prevent engine over-speed.

1. Always use the clutch when downshifting from gear to gear to prevent premature synchronizer failure.
2. Depress the clutch pedal, move the shift lever to next desired speed.
3. Release the clutch pedal.
4. Slow vehicle.
5. Continue downshifting.

Lubrication

Proper Lubrication. . .
the Key to long transmission life

Proper lubrication procedures are the key to a good all-around maintenance program. If the oil is not doing its job, or if the oil level is ignored, all the maintenance procedures in the world are not going to keep the transmission running or assure long transmission life.

Eaton Transmissions are designed so that the internal parts operate in an oil circulating bath created by the motion of the gears and shafts.

Thus, all parts are amply lubricated if these procedures are closely followed:

1. **Maintain oil level.**
2. **Follow maintenance interval chart.**
3. **Use only recommended lubricate.**
4. **Buy from a reputable dealer.**

Maintenance Interval Chart

Eaton® Roadranger® CD50 Transmission Fluid	
HIGHWAY USE-Heavy Duty and Mid-Range Initial Fill with Eaton® Roadranger® CD50 Transmission Fluid	
Every 10,000 miles (16090 Km)	Check fluid level. Check for leaks.
Every 250,000 miles (402336 Km)	Change transmission fluid.
OFF-HIGHWAY USE	
Every 40 hours	Inspect lubricant level. Check for leaks.
Every 500 hours	Change transmission fluid where severe dirt conditions exist.
Every 1,000 hours	Change transmission fluid (Normal off-highway use.)
HIGHWAY USE-Heavy Duty and Mid-Range Initial Fill with Other Recommended Oil	
First 3,000 to 5,000 miles (4827 to 8045 Km)	Factory fill initial drain. Refill with Eaton© Roadranger© CD50 Transmission Fluid; thereafter follow maintenance intervals above.
Heavy Duty Engine Lubricant or Mineral Gear Lubricant	
HIGHWAY USE	
First 3,000 to 5,000 miles (4827 to 8045 Km)	Factory fill initial drain .
Every 10,000 miles (16090 Km)	Inspect lubricant level. Check for leaks.
Every 50,000 miles (80450)	Change transmission lubricant.
OFF-HIGHWAY USE	
First 30 hours	Change transmission lubricant on new units.
Every 40 hours	Inspect lubricant level. Check for leaks.
Every 500 hours	Change transmission lubricant where severe dirt conditions exist.
Every 1,000 hours	Change transmission lubricant (Normal off-highway use.)

If your vehicle has a transmission oil filter, you must change the filter when fluid or lubricant is changed.

Recommended Lubricant		
Type	**Grade (SAE)**	**Fahrenheit Ambient Temperature**
Eaton® Roadranger® CD50 Transmission Fluid	**50**	**All**
Heavy Duty Engine Oil MIL-L-2104B, C or D or API-SF or API-CD (Previous API designations acceptable)	50 40 30	Above 10°F Above 10°F Below 10°F
Mineral Gear Oil with rust and oxidation inhibitor API-GL-1	90 80W	Above 10°F Below 10°F

Do not use EP gear oil or multi-purpose gear oil.

Additives and friction modifiers must not be introduced.

Lubrication

Proper Oil Level

Make sure oil is level with the filler opening. Because you can reach oil with your finger does not mean oil is at the proper level. **(One inch of oil level is about one gallon of oil.)**

Draining Oil

Drain transmission while oil is warm. To drain oil remove the drain plug at case bottom. Clean the drain plug before re-installing.

Refilling

Clean case around filler plug and remove plug from case side. Fill the transmission to the level of the filler opening. If the transmission has two filler openings, fill to the level of both openings.

The exact amount of oil depends on the transmission inclination and model. Do not over fill—this causes oil to be forced out of the case through the front bearing cover.

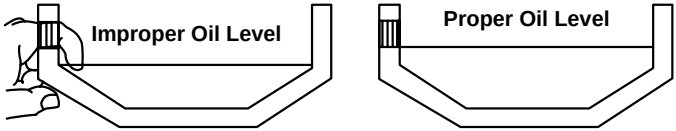

When adding oil, types and brands of oil should not be mixed because of possible incompatibility.

Preventive Maintenance

Note: Item numbers refer to the illustration

Preventive Maintenance Checks

1— Clutch Housing Mounting

- Check all capscrews of the clutch housing flange for looseness.

2— Clutch Release Bearing (Not Shown)

- Remove hand hole cover and check radial and axial clearance in release bearing.
- Check relative positive of thrust surface of release bearing with thrust sleeve on push-type clutches.

3— Clutch Pedal Shaft and Bores

- Pry upward on shafts to check wear.
- If excessive movement is found, remove clutch release mechanism and check bushing on bores and wear on shafts.

4— Lubricant

- Change at specified service intervals.
- Use only the types and grades recommended.

5— Filler and Drain Plugs

- Remove filler plugs and check level of lubricant at specified intervals. Tighten filler and drain plugs securely.

6— Capscrews and Gaskets

- Check all capscrews, especially those on P.T.O. covers and rear bearing covers for looseness which would cause oil leakage.
- Check P.T.O. opening and rear bearing covers for oil leakage due to faulty gasket.

7— Shift lever

- Check for looseness and free play in housing. If lever is loose in housing, proceed with check number 8.

8— Shift lever Housing Assembly

- Check tension spring and washer for set and wear.
- Check the shift lever spade pin and slot for wear.
- Check bottom end of shift lever for wear and check slot of yokes and blocks in shift bar housing for wear at contact points with shift lever.

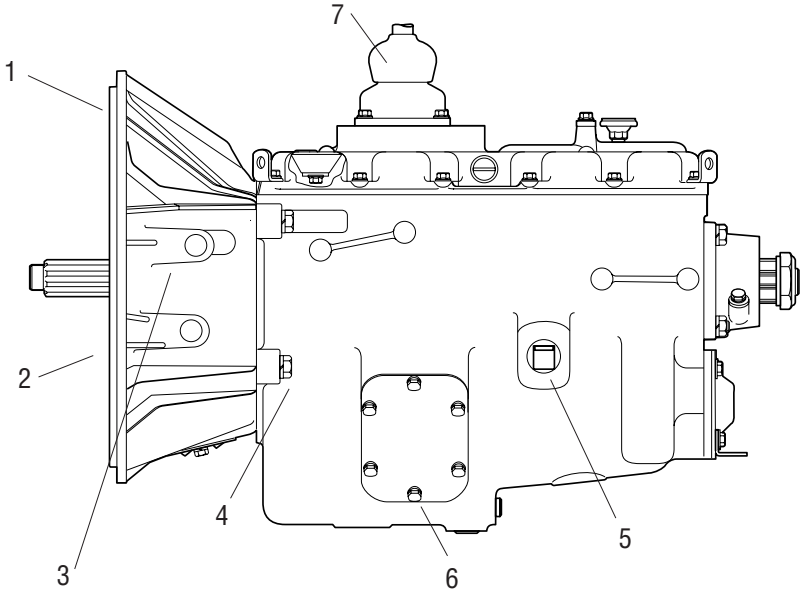

Copyright Eaton Corporation, 2012. Eaton hereby grant their customers, vendors, or distributors permission to freely copy, reproduce and/or distribute this document in printed format. It may be copied only in its entirety without any changes or modifications. THIS INFORMATION IS NOT INTENDED FOR SALE OR RESALE, AND THIS NOTICE MUST REMAIN ON ALL COPIES.

Note: Features and specifications listed in this document are subject to change without notice and represent the maximum capabilities of the software and products with all options installed. Although every attempt has been made to ensure the accuracy of information contained within, Eaton makes no representation about the completeness, correctness or accuracy and assumes no responsibility for any errors or omissions. Features and functionality may vary depending on selected options.

For spec'ing or service assistance, call 1-800-826-HELP (4357) or visit www.eaton.com/roadranger. In Mexico, call 001-800-826-4357.

Roadranger: Eaton and trusted partners providing the best products and services in the industry, ensuring more time on the road.

Eaton Corporation
Vehicle Group
P.O. Box 4013
Kalamazoo, MI 49003 USA
800-826-HELP (4357)
www.eaton.com/roadranger

Printed in USA

EATON
Powering Business Worldwide

BACKED BY
Roadranger
SUPPORT