Driver Instructions

**Video Instruction Available**
Instructional videos are available for download at no charge at roadranger.com

Videos are also available for purchase. To order, call 1-888-386-4636. Ask for item # RRSD0002

# Eaton Fuller® Heavy-Duty Transmissions TRDR0515

September 2007

| | | |
|---|---|---|
| FR-11210B | FRO-11210C | FROF-11210B |
| FR-12210B | FRO-12210B | FROF-11210C |
| FR-13210B | FRO-12210C | FROF-12210B |
| FR-14210B | FRO-13210B | FROF-12210C |
| FR-15210B | FRO-13210C | FROF-13210B |
| FR-9210B | FRO-14210B | FROF-13210C |
| FRF-11210B | FRO-14210C | FROF-14210B |
| FRF-12210B | FRO-15210B | FROF-14210C |
| FRF-13210B | FRO-15210C | FROF-15210B |
| FRF-14210B | FRO-16210B | FROF-15210C |
| FRF-15210B | FRO-16210C | FROF-16210B |
| FRF-9210B | FRO-17210C | FROF-16210C |
| FRO-11210B | FRO-18210C | FRW-15210B |

EATON
Powering Business Worldwide

BACKED BY
Roadranger
SUPPORT

# Warnings

## Warnings and Cautions

**WARNING**

Read the entire driver instructions before operating this transmission.

Before starting a vehicle, always be seated in the driver's seat, place the shift level to neutral, and disengage the clutch.

If engine cranks in any gear other than neutral or without the master clutch depressed, service your vehicle neutral safety start circuit immediately.

Before working on a vehicle or leaving the cab with the engine running, place the transmission in neutral and set the parking brakes, and block the wheels.

Do not release the parking brake or attempt to select a gear until the air pressure is at the correct level.

When parking the vehicle or leaving the cab, always place the shift lever in neutral and set the parking brakes.

TOWING: To avoid damage to the transmission during towing, disconnect the driveline.

Every effort has been made to ensure the accuracy of all information in this brochure. However, Eaton Corporation makes no expressed or implied warranty or representation based on the enclosed information. Any errors or omissions may be reported to Technical Service, Eaton Corporation, P.O. Box 4013, Kalamazoo, Michigan 49003-4013.

# Table of Contents


## Introduction

Tag Information ..... 1
Nomenclature ..... 2

## Shift Lever Positions

Shift Positions ..... 3

## General Information

General Information ..... 6

## Operation

Driving Operation ..... 9

## Lubrication

Proper Lubrication ..... 13

## Preventive Maintenance

Maintenance Checks ..... 16

# Reference Numbers

## Tag Information

Transmission model designation and other transmission identification information are stamped on the transmission tag. To identify the transmission model designation and serial number, locate the tag on the transmission and then locate the numbers as shown.

### All 10-Speed except 1X210 Models

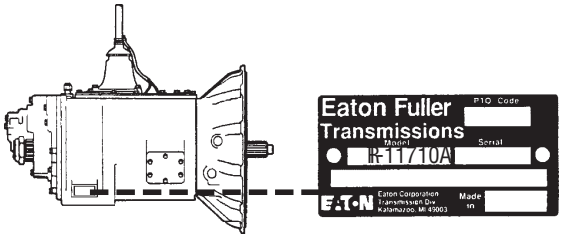


### 1X210 Models

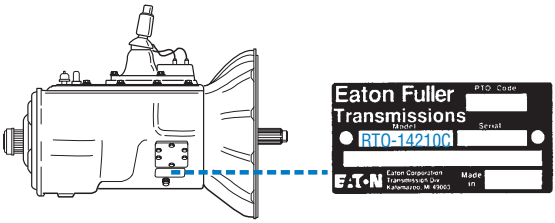


**DO NOT REMOVE OR DESTROY THE TRANSMISSION IDENTIFICATION TAG**.

Record transmission identification data. Have these reference numbers handy when ordering replacement parts or requesting service information.

Transmission Model: _____

Transmission Serial Number: _____

## Nomenclature

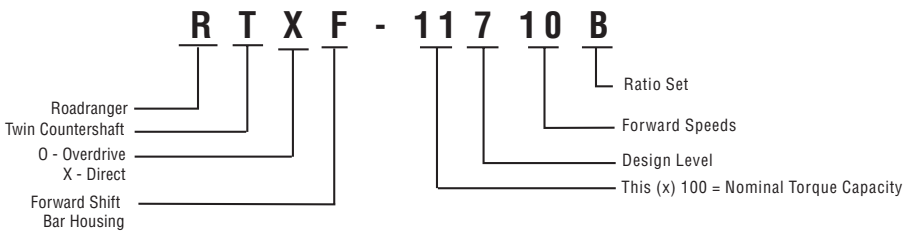

# Shift Lever Positions

## Shift Positions

### RT & RTX

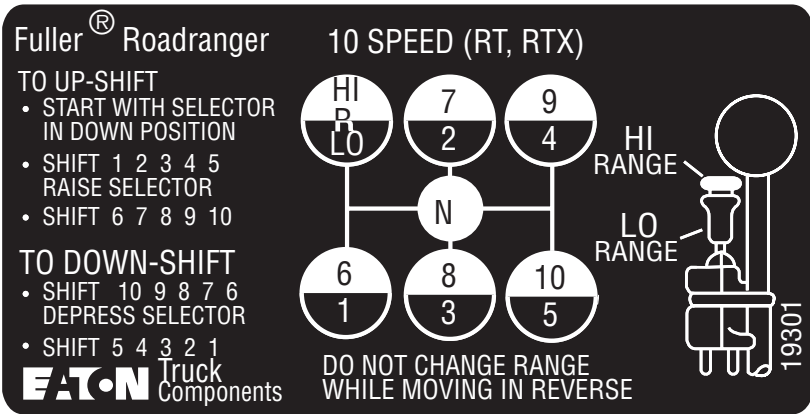


### RT & RTX & FRO (previously RTO on 1X210 Models)

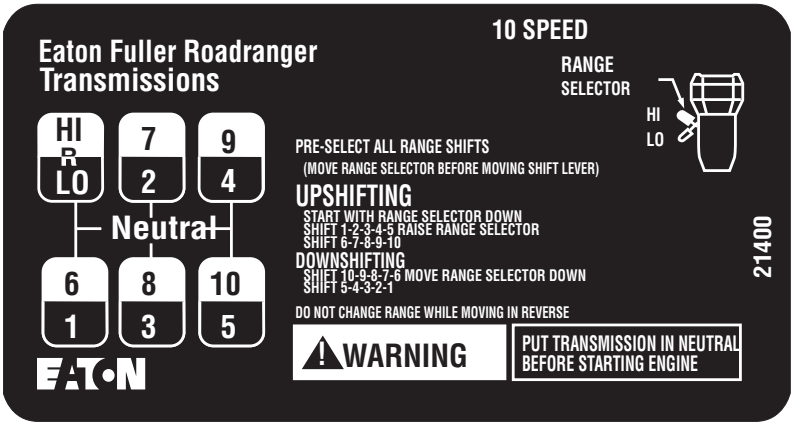

## RTO

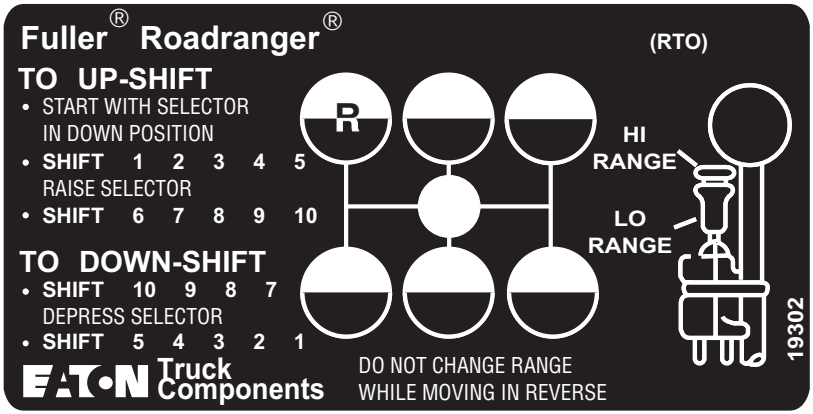


## RTO (1X610 Models Only)

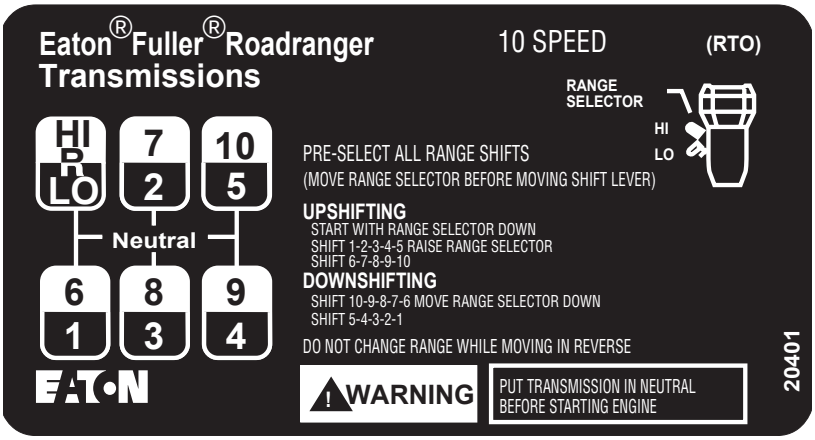

# Shift Lever Positions

**Range Valve (A-3546)**

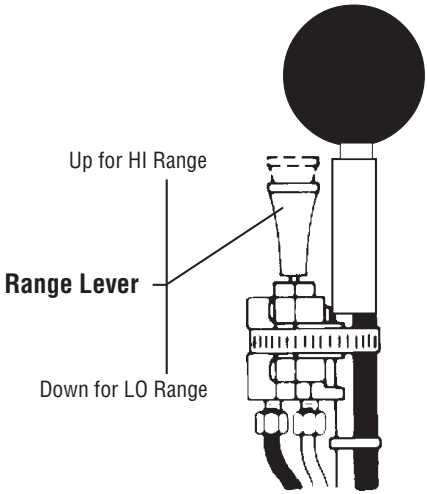


**Roadranger Valve—A-5010**

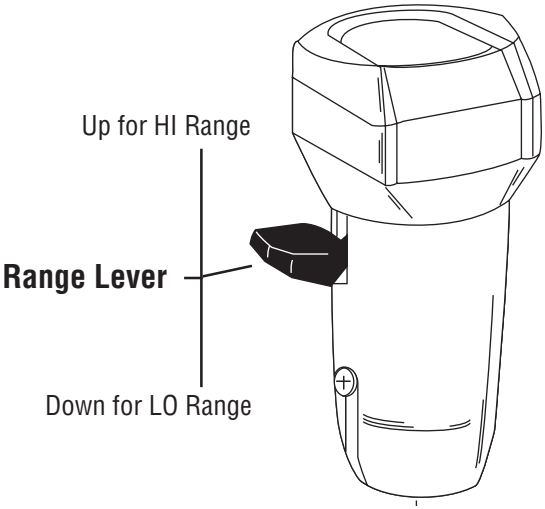

# General Information

This Eaton® Fuller® Roadranger transmission model contains ten forward speeds and two reverse speeds. The gear shift lever mechanically engages and disengages five forward gears and one reverse gear in the transmission front section. The range lever on the Roadranger Valve allows the operator to control an air shifted auxiliary section to provide a LO and HI “range”. The five forward gears selected in LO range are used again in HI range to provide the 10 progressive forward gear ratios.

Once the highest shift lever position (5th gear) is obtained in LO range, the operator preselects the range shift lever for HI range. The range shift occurs automatically as the shift lever is moved from 5th gear position to the 6th gear position.

When downshifting, the operator preselects the range lever for LO range and the range shift occurs automatically during the shift lever movement to the next gear position.

**Shift Pattern Diagram**
A shift pattern diagram should be in your vehicle. If it has been lost, a replacement may be obtained by writing to:

Eaton Corporation
**Truck Components**
Global Marketing Services
P.O. Box 4013
Kalamazoo, Michigan 49003
www.roadranger.com

Please specify shifting controls used and transmission model number when making request.

## Transmission Features

### Range Shift

The range lever selects LO or HI range. It is used once during an upshift sequence and once during a downshift sequence.

### Preselect

**IMPORTANT:** Always preselect all range shifts when upshifting or downshifting. Preselection requires that the range lever is moved to the needed position before starting the shift.

Preselected range shifts are completed automatically as the lever is moved through neutral and into the next gear. Preselecting all range shifts prevents damage to the transmission and provides for smoother shifts.

### Range Synchronizer Protection Device (1X210 Models)

The transmission contains a range synchronizer protection device to prevent damage to the HI range synchronizer. If the shift lever engages a front section gear prior to completion of the air shift into HI range, the range synchronizer remains in neutral, preventing damage to the range synchronzier. If this neutral condition occurs, the operator must shift the lever to neutral and then back into gear to complete the range shift.

## Optional Equipment

For easier and faster gear engagement while the vehicle is standing still, some Eaton® Fuller® transmissions may be equipped with either a Countershaft Brake or a Clutch Brake.

**Countershaft Brake (Used with push-type clutches)**
The control button is mounted on the shift lever just below the shift knob. To operate, disengage the clutch, press down the control button, and shift into LO or reverse. This is an air operated mechanical brake which slows down the transmission gearing by forcing a piston against the countershaft PTO gear. Never use the Countershaft Brake when upshifting or downshifting. Use **only** for initial gear engagement when the vehicle is standing still.

**Clutch Brake (Used with pull-type clutches)**
The clutch brake is applied by fully depressing the clutch pedal to the floor board. When applied the brake slows down and can stop the transmission front box gearing. It is a disc-type brake incorporated into the clutch and transmission drive gear assemblies. Never use the Clutch Brake when upshifting or downshifting. Use **only** for initial gear engagement when the vehicle is standing still.

# Operation

## Driving Operation

## Driving Tips

- Always use normal double-clutching procedures when making lever shifts.
- Always select an initial starting gear that provides sufficient reduction for the load and terrain.
- Never slam or jerk the shift lever to complete gear engagements.
- Never coast with the shift lever in the neutral position.
- Never downshift at too high of a road speed.
- Never move the range lever with the shift lever in neutral while the vehicle is moving.
- Never make a range shift while moving in reverse.
- In most cases, depending on the engine and axle ratios, you can save valuable fuel by operating the vehicle at less than governed RPM while cruising in top gear.
- If the lever shift is completed before the range shift (transmission in neutral), the lever must be moved back to neutral for the range to complete (1X210 models only).

## Double-Clutching Procedure

**When ready to make a shift:**

1. Depress pedal to disengage clutch.
2. Move the shift lever to neutral.
3. Release pedal to engage clutch.*

   a. Upshifts—decelerate engine until engine RPM and road speed match.

   b. Downshifts—accelerate engine until engine RPM and road speed match.
4. Quickly depress pedal to disengage clutch and move shift lever to next gear speed position.
5. Release pedal to engage clutch.

**Note:** *By engaging the clutch with the shift lever in the neutral position, the operator is able to control the mainshaft gear RPM since it is regulated by engine RPM. This procedure allows the operator to speed up or slow down the mainshaft gearing to properly match the desired gear speed and the output shaft speed.

## Initial Start-Up

**WARNING:** Before starting a vehicle always be seated in the driver's seat, move the shift lever to neutral, and set the parking brakes.

1. Make sure the shift lever is in neutral and the parking brakes are set.
2. Turn on the key switch to start the engine.
3. Allow the vehicle air pressure to build to the correct level. Refer to your "Operator and Service Manual" supplied with the truck.
4. Apply the service brakes.
5. Make sure the range lever is down in the LO range position.

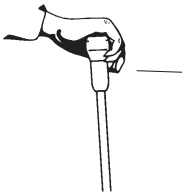


6. Depress the clutch pedal to the floor.
7. Move the shift lever to desired initial gear.
8. Release the parking brakes on the vehicle.
9. Slowly release the clutch pedal and apply accelerator.

# Operation

## Driving Operation

In the following instructions, it is assumed that the driver is familiar with operating heavy-duty trucks and tractors, and can coordinate the shift lever movement and clutch pedal to make smooth gear engagements while upshifting or downshifting.

**CAUTION:** Never move the range lever with the shift lever in neutral while the vehicle is moving.

## Upshifting

1. Move the shift lever, double-clutching, to the next desired gear position in LO range.

**Range shift—LO to HI Range (5th to 6th)…**

2. When in last gear position for LO range and ready for the next upshift, pull up the Range Selector and move the shift lever, double-clutching, to the next higher speed position according to your shift pattern. As the shift lever passes through neutral, the transmission will automatically shift from LO to HI range.

**Note:** If after attempting a range shift to HI the transmission remains in neutral with the shift lever in gear, the range synchronizer protection device may be activated. Move the shift lever into neutral to allow the range shift to complete and then, move the shift lever back into gear.

3. Continue upshifting, double-clutching, to the next desired gear position in HI range.

## Downshifting

1. Move the shift lever, double-clutching, to the next desired gear position in HI range.

**Range shift from HI Range to LO Range (6th to 5th)…**

2. While in 6th and ready for the next downshift, preselect LO range, push the Range Selector down.
3. Move the shift lever, double-clutching, to the next desired gear position in LO range. As the shift lever passes through neutral, the transmission automatically shifts from HI range to LO range.
4. Continue downshifting, double-clutching, to the next desired gear position in LO range.

# Lubrication

## Proper Lubrication

**The Key to Long Transmission Life**
Proper lubrication procedures are the key to a good all-around maintenance program.

Eaton® Fuller® Transmissions are designed so that the internal parts operate in an oil circulating bath created by the motion of the gears and shafts.

All parts will be properly lubricated if these procedures are closely followed:

- Maintain oil level. Inspect regularly.
- Follow maintenance interval chart.
- Use the correct grade and type of oil.
- Buy from a reputable dealer.

## Maintain Proper Oil Level

Make sure oil is level with the filler opening. Being able to reach oil with your finger does not mean oil is at proper level. **(One inch of oil level is about one gallon of oil.)**

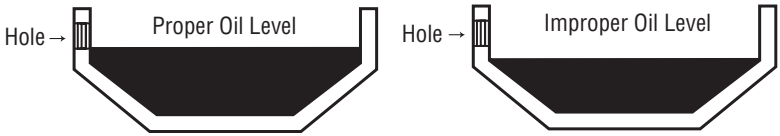


For additional lubrication information, see TCMT-0021.

If your vehicle has a transmission oil filter, you must change the filter when fluid or lubricant is changed.
**Additive and friction modifiers must not be introduced. Never mix engine oils and gear oils in the same transmission.**

The use of lubricants not meeting these requirements will affect warranty coverage.

For a list of Eaton Approved Synthetic Lubricants see TCMT-0020 or call 1-800-826-HELP (4357).

**Buy from a reputable dealer**
For a complete list of approved and reputable dealers see TCMT-0020 or write to:

Eaton Corporation
**Truck Components**
Global Marketing Services
P.O. Box 4013
Kalamazoo, MI 49003
www.roadranger.com

## Transmission Operating Angles

If the transmission operating angle is more than 12 degrees, improper lubrication will occur. The operating angle is the transmission mounting angle in the chassis plus the percent of upgrade (expressed in degrees).

For operating angles over 12 degrees, the transmission must be equipped with an oil pump or cooler kit to insure proper lubrication.

## Operating Temperatures with Oil Coolers

Operating at temperatures above 250° F (120°C) causes loaded gear tooth temperatures to exceed 350°F (177°C) which will ultimately destroy the heat treatment of the gears. Temperatures above 250°F (120°C) should be regarded as a warning of inadequate cooling. If the elevated temperature is associated with unusual operating conditions that will reoccur, a cooler should be added, or the capacity of the existing cooling system increased.

The following conditions in any combination can cause operating temperatures of over 250°F:

- Operating consistently at slow speed.
- High ambient temperatures.
- Restricted air flow around transmission.
- Exhaust system too close to transmission.
- High horsepower operation.

External oil coolers are available to reduce operating temperatures when the above conditions are encountered.

## Oil Cooler Chart

| Transmission Oil Coolers are: |
|---|
| Recommended |
| • With engines of 350 H.P. and above. |
| Required |
| • With engines 399 H.P. and above and GCW's over 90,000 lbs. |
| • With engines 399 H.P. and above and 1400 lbs. ft. or greater torque. |
| • With engines 450 H.P. and above. |

## Maintenance Checks

The following maintenance items are necessary to prevent costly transmission failures which may not be covered by warranty.

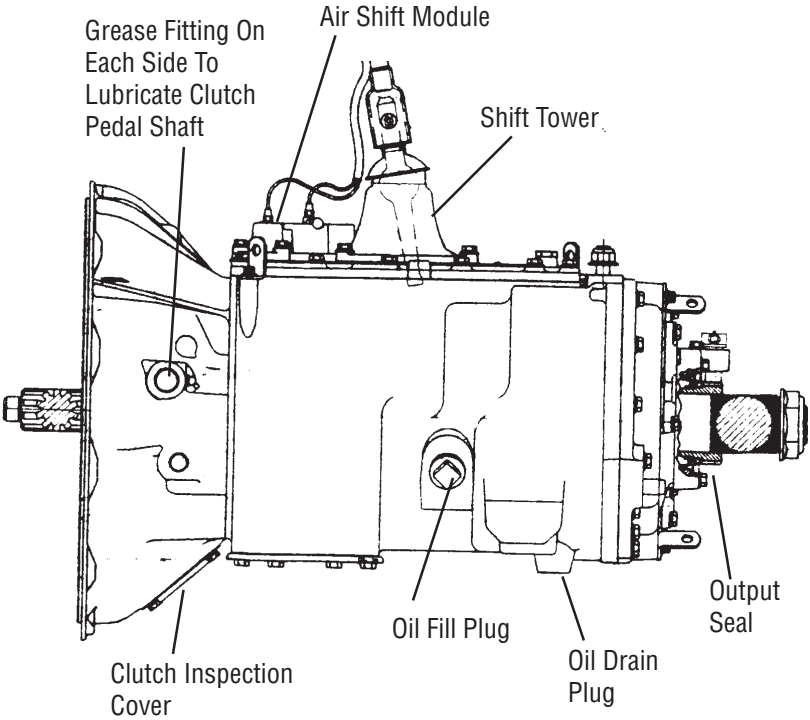


Transmission Oil -

- Check transmission daily for oil leaks. Repair promptly to prevent oil loss and subsequent transmission failure.
- Check transmission oil level at every engine oil change interval. Add transmission oil as necessary.
- Drain and replace transmission oil as recommeneded by the schedule in this book.

# Preventative Maintenance

Air System -

- Drain moisture from vehicle air system daily.
- Listen for air leaks daily, repair promptly.
- If the vehicle is equipped with an air dryer, confirm that the air dryer system is working properly. Repair as necessary.
- Service the vehicle air compressor as required to prevent oil from entering the vehicle air system.

Master Clutch System -

- Lubricate clutch release pedal shaft bushings at every chassis lubrication interval. There should be one grease fitting on each side of the transmission clutch housing.
- Have the clutch checked and adjusted if any of the following occurs:
- Clutch does not disengage completely
- Clutch brake does not function
- Clutch pedal free-play is less than 1/2”
- When replacing the clutch, use a high quality spring damped replacement unit.

Drivetrain -

- Inspect the driveshaft for loose or worn U-joints weekly. Repair promptly to prevent excessive driveline vibration.
- Have the driveline checked by a maintenance facility if unusual noise or vibration is detected.

Overall Inspection -

- Inspect the transmission at the chassis lubrication interval for loose or missing capscrews and fasteners. Pay particular attention to the capscrews that attach the transmission to the engine.

Copyright Eaton Corporation, 2012. Eaton hereby grant their customers, vendors, or distributors permission to freely copy, reproduce and/or distribute this document in printed format. It may be copied only in its entirety without any changes or modifications. THIS INFORMATION IS NOT INTENDED FOR SALE OR RESALE, AND THIS NOTICE MUST REMAIN ON ALL COPIES.

**Note:** Features and specifications listed in this document are subject to change without notice and represent the maximum capabilities of the software and products with all options installed. Although every attempt has been made to ensure the accuracy of information contained within, Eaton makes no representation about the completeness, correctness or accuracy and assumes no responsibility for any errors or omissions. Features and functionality may vary depending on selected options.

**For spec'ing or service assistance, call 1-800-826-HELP (4357) or visit www.eaton.com/roadranger. In Mexico, call 001-800-826-4357.**

Roadranger: Eaton and trusted partners providing the best products and services in the industry, ensuring more time on the road.

**Eaton Corporation**
Vehicle Group
P.O. Box 4013
Kalamazoo, MI 49003 USA
800-826-HELP (4357)
www.eaton.com/roadranger

Printed in USA

EATON
*Powering Business Worldwide*

BACKED BY
**Roadranger**
SUPPORT