EFX IO84 Input/Output Module

Input/Output expansion module for EFX Controllers
CANopen interface
Surface electrostatically coated (cathodic immersion) 10...32V DC

TECHNICAL DATA	8 INPUTS (4 DIGITAL / 4 ANALOGUE) 4 OUTPUTS (DIGITAL OR PWM)
Housing	**Die-cast zinc housing with 8 outputs and terminal chamber surface electrostatically coated (cathodic immersion), black**
Dimensions (l x w x h)	**227 x 77 x 39 mm (without cable gland)**
Installation	**Screw connection by means of 3 M5 x l screws to DIN 912 or DIN 7984**
Connection Operating voltage and CAN bus Inputs/Outputs CANin/CANout	 7-pole terminal strip with CAGE CLAMP ® connection technology (2 x 2-pole / 1 x 3-pole) 0.08...4 mm² (AWG 28...AWG 12), nominal current 20 A Identical potentials can be linked using a jumper header (GND and UB potentials linked upon delivery) Cable entry via M16 cable gland 8 x M12 connector (socket), 5-pole 2 x M12 connector (plug/socket), 5-pole
Weight	**1.2 kg**
Inputs can be configured as	**8** 4 digital, positive-switching (high side) 4 analogue, 0...10/32 V, 0/4...20 mA, ratiometric or digital, positive-switching
Sensor supply I_{max}	**400 mA**
Outputs can be configured as switching current per output total current	**4** digital, positive-switching (high side), with diagnostic capability PWM channel max. 4 A max. 16 A
Operating voltage U_B	**10...32 V DC**
Current consumption	**≤ 50 mA (without external load at 24 V DC)**
Operating temperature	**– 40...85 °C**
Storage temperature	**– 40...85 °C**
Protection	**IP 67**
Interface	**CAN interface 2.0 B, ISO 11898**
Baud rate	**20 Kbits/s...1 Mbit/s (default setting 125 Kbits/s) (adjustable using hex-code switches in the terminal chamber or via the CANopen object directory)**
Communication profile	**CANopen, CiA DS 301 version 4, CiA DS 401 version 2.1**
Node ID (default)	**hex 20 (= dec 32) (adjustable using 2 hex-code switches in the terminal chamber or via the CANopen object directory)**
Displays	**1 LED green (PWR)** **1 LED red (diagnosis, DIA)** **8 LEDs yellow (status of the inputs / outputs)**

Connecting and operating elements

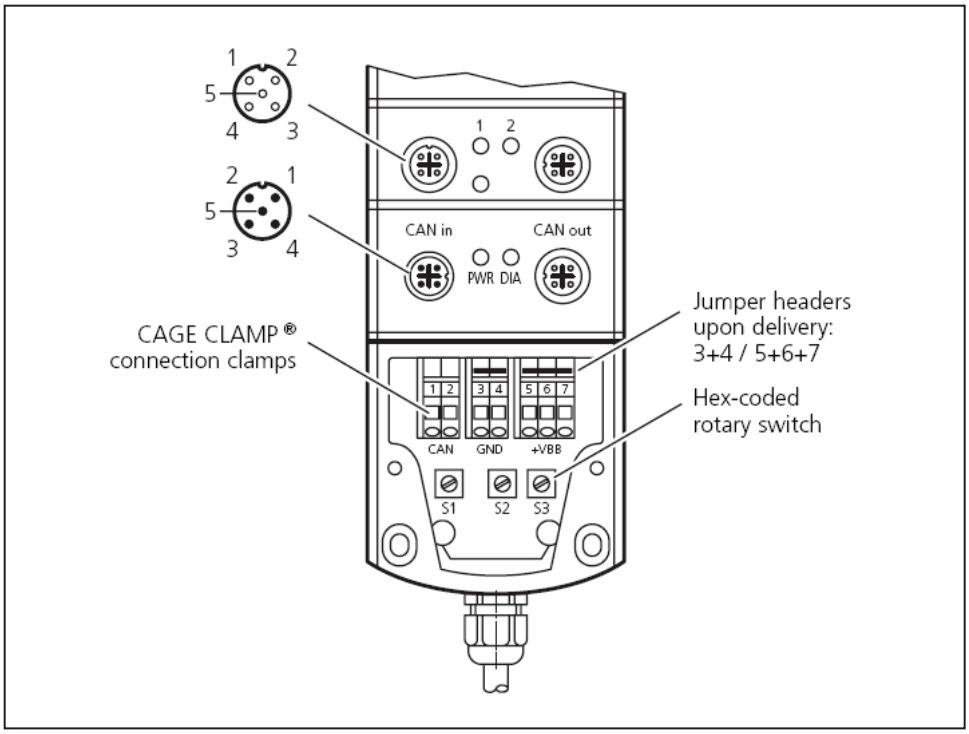

Hex-code switch coding

Switch	Position	Description
S1 Baud rate	0 1 2 3 4 5 6 7 8...E F	1000 Kbits/s 800 Kbits/s 500 Kbits/s 250 Kbits/s 125 Kbits/s 100 Kbits/s 50 Kbits/s 20 Kbits/s not defined adjustment via object directory (default)
S2 Node ID_H	0...7 F	high nibble, e.g. 20 hex (= 32 dec) adjustment via object directory (default)
S3 Node ID_L	0...E F	low nibble, e.g. 20 hex (= 32 dec) adjustment via object directory (default)

Operating states (LEDs)

LED	Status	Description
PWR (green)	OFF ON 2.0 Hz	no supply voltage module in stand-by mode CANopen status: PREOPERATIONAL / PREPARED outputs = OFF module active CANopen status: OPERATIONAL outputs are updated
DIA (red)	OFF ON	communication OK communication disturbed • node guard / heartbeat error (if node guarding / heartbeat is activated) • no synch objects (if synch monitoring is activated)
IN (yellow)	ON	output switched
OUT (yellow)	ON	binary output: output switched (ON) analogue output: PWM preset value ≠ 0 current preset value > 20

EFX IO84	Characteristics of the outputs
Inputs Channel 1, 3, 5, 7 (pin 4)	■ Digital inputs Switch-on level 0.4...0.7 UB Switch-off level 0.2...0.24 UB Input resistance 3 kΩ Input frequency max. 1 kHz
Channel 1...8 (pin 2) can be configured as ...	■ Analogue inputs (voltage, current or ratiometric) The analogue signals can be connected to the sockets 1, 3, 5, 7 or alternatively to the sockets 2, 4, 6, 8 (pin 2 of the sockets 1-2, 3-4, 5-6 and 7-8 linked). The LED (yellow) for the analogue input is on the socket side 1, 3, 5, 7.
	Voltage inputs Input voltage 0...10/32 V Resolution 10 bits Input resistance 50/30 kΩ Input frequency 50 Hz Accuracy ± 1 % FS
	Current inputs Input current 0/4...20 mA Resolution 10 bits Input resistance 400 Ω Input frequency 50 Hz Accuracy ± 1 % FS
	Ratiometric inputs for potentiometric transducers (e.g. joystick) Function ((UIN – ½UB) ÷ ½UB) x 1000 ‰ Value range 0...1000 ‰
	Digital inputs Switch-on level 0.7 UB Switch-off level 0.4 UB Input resistance 30 kΩ Input frequency max. 50 Hz
Outputs Channel 2, 4, 6, 8 (pin 4) can be configured as ...	■ Semiconductor outputs, with diagnostic capability (wire break and short circuit) Channel 2, 4, 6, 8 (pin 4) short-circuit and overload protected can be configured as ... Switching voltage 10...32 V DC Switching current max. 4 A Total current max. 16 A
	■ PWM outputs PWM frequency 20...250 Hz Pulse duty factor 0...1000 ‰ Resolution 1 ‰ Switching current max. 4 A (referred to PWM value 1000 ‰.) Total current max. 16 A
Note	also see wiring (following page)

	Test standards and regulations
Climatic test	Damp heat to EN 60068-2-30, test Db (≤ 95% rel. humidity, non-condensing), Salt mist test to EN 60068-2-52, test Kb, severity level 3, Protection test to EN 60529
Mechanical resistance	Vibration to EN 60068-2-6, test Fc, Shock to EN 60068-2-27, test Ea, Bump to EN 60068-2-29, test Eb
Immunity to conducted interference	to ISO 7637-2, pulses 2, 3a, 3b, severity level 4, function state A to ISO 7637-2, pulse 5, severity level 1, function state A to ISO 7637-2, pulse 1, severity level 4, function state C
Immunity to interfering fields	directive 95/54/EC at 100 V/m (e1 type approval) and DIN EN 61000-6-2 :2001 (CE)
Interference emission	directive 95/54/EC (e1 type approval) and DIN EN 61000-6-4 :2001 (CE)

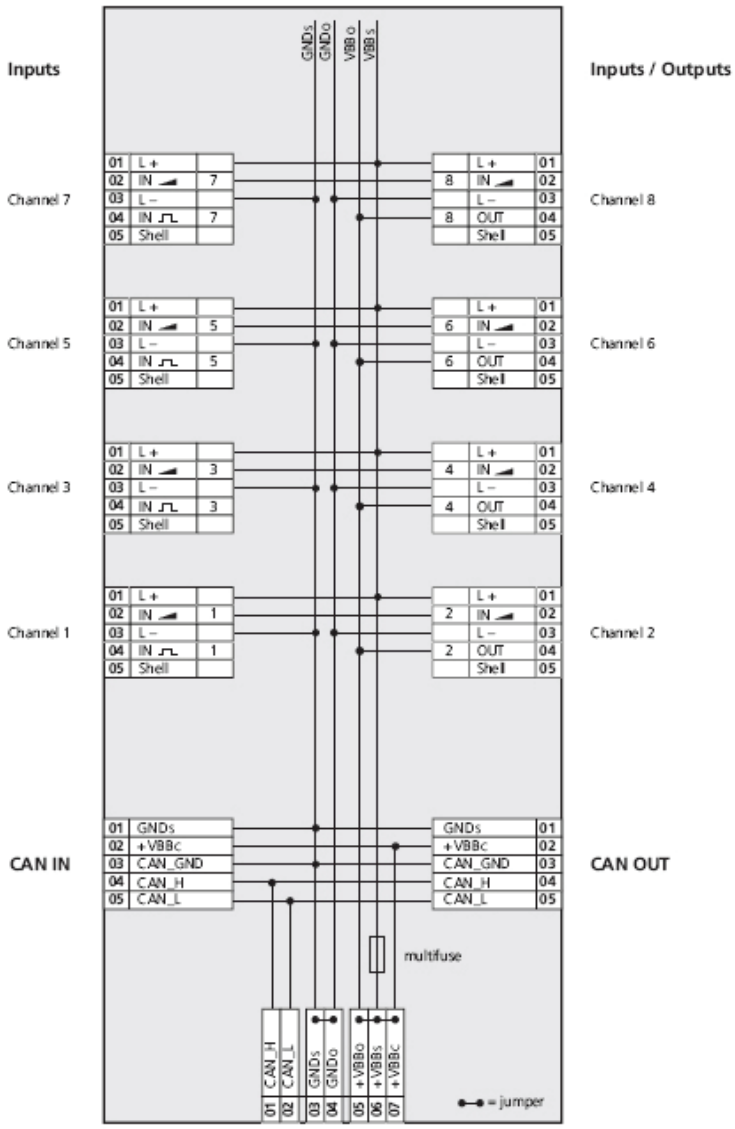

CAN Interface / Supply

Abbreviations

CAN_H = CAN interface (high)
CAN_L = CAN interface (low)

GND_O= ground (output)
GND_S = ground (module)

PWM = output for pulse-width modulated signals
VBB_C = operating voltage (via CANin/ CANout plug)

VBB_O = operating voltage (output)
VBB_S = operating voltage (module)

Eaton
Hydraulics Operations USA
14615 Lone Oak Road
Eden Prairie, MN 55344
USA
Tel: 952-937-9800
Fax: 952-294-7722
www.hydraulics.eaton.com

Eaton
Hydraulics Operations Europe
Route de la Longeraie 7
1110 Morges
Switzerland
Tel: +41 (0) 21 811 4600
Fax: +41 (0) 21 811 4601

Eaton
Hydraulic Operations Asia Pacific
11th Floor Hong Kong New World Tower
300 Huaihai Zhong Road
Shanghai 200021
China
Tel: 86-21-6387-9988
Fax: 86-21-6335-3912

© 2007 Eaton Corporation
All Rights Reserved
Printed in USA
Document No. E-ELMD-MS002-E
January 2007