Programmed with Eaton CONTROL F(x)™ to IEC 61131-3 Standard

SFX 2000 Controller

Powering Business Worldwide

General Description

SFX 2000 Controller is a powerful electronic solution for the off-highway industry that relies on its equipment to function under the most difficult conditions.

SFX 2000 Controller was designed to comply with the IEC 61508 international standard. The stand-alone version and the network version with TTP® fulfill SIL 2 (Safety Integrity Level) and SIL 3 requirements respectively. It is part of a complete and compatible product family and is protected by a robust housing suited to the off-highway industry.

Features

- MPC 555, 40 MHz, 448 kB int. Flash, 26 kB int. RAM, 512 kB ext. RAM (opt. 1 MB ext. RAM), 2 MB ext. Flash 16 kbit EEPROM
- Watchdog CPU Freescale HC 908, including monitoring software
- 1 x TTP bus with redundant channels
- TTP communication controller AS 8202 NF
- 1 x RS-232 and 1 x LIN serial interfaces
- 2 x CAN, 125 to 500 kbit/s
- 8 x analog IN 0 to 5 V or 4 to 20 mA / 10 bit, configured by software
- 12 x analog / digital IN 0 to 10 V / 10 bit
- 8 x digital IN (counter 10 Hz to 10 kHz)
- 5 x digital IN for TTP encoding number for hardware identification
- 8 x digital OUT 2.35 A, PWM, current control loop, short to ground protection and open load detection
- 4 x digital OUT 4 A, PWM, short to ground protection and open load detection
- 16 x digital OUT 4 A, short to ground protection and open load detection
- 3 x digital OUT 15 A, short to ground protection and open load detection (1 x with wind screen wiper option)
- 3 x digital OUT for external relays to switch off output for safely applications (fail-silent)
- 2 x analog OUT, 0.2 to 0.8 Vbat
- Internal: monitoring of board temperature, sensor supply and battery
- 1 x sensor supply 10.5 V
- 2 x sensor supply 5 V
- Safety: modular safety concept for distributed and standalone systems
- Software: TTPMatlink, Simu link®, C/C++, CoDeSys® 2.3

Specifications

PARAMETER		UNIT
Dimensions	234 x 181 x 48	mm
Weight	790	g
Operating Temperature	- 40 to + 85	°C
Operating Altitude	0 to 4 000	M
Supply Voltage	9 to 32	V
Peak Voltage	45	Vmax
Current Consumption	1 at 9 V	Amax

ENVIRONMENTAL SPECIFICATIONS	
Functional Safety	IEC 61508 SIL 2
Protection Degree	DIN 40050 IP65
Vibration, Shock, Bump	IEC 68-2-64, -27, -29, -6
EMC	ISO/DIS 13 766
ESD	IEC 61 000
Temperature Environment	IEC 68-2-1, -2, -3, -14, -30
Load Dump	ISO 7637

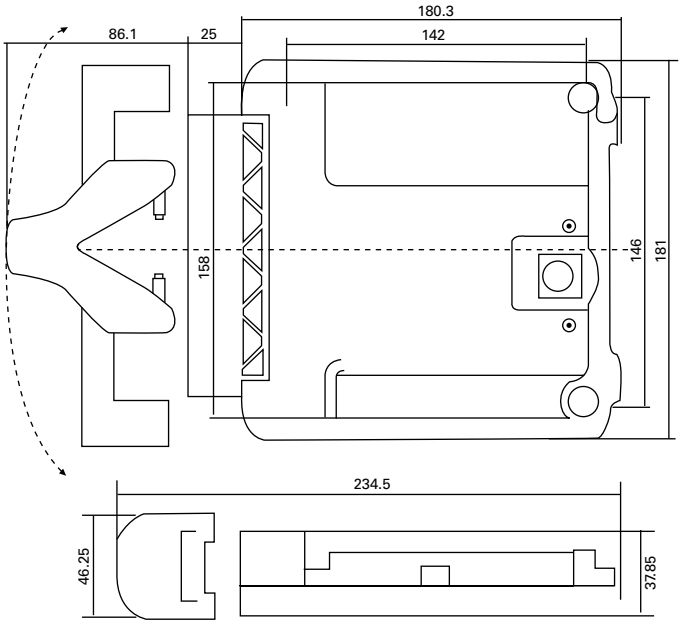

Block Diagram

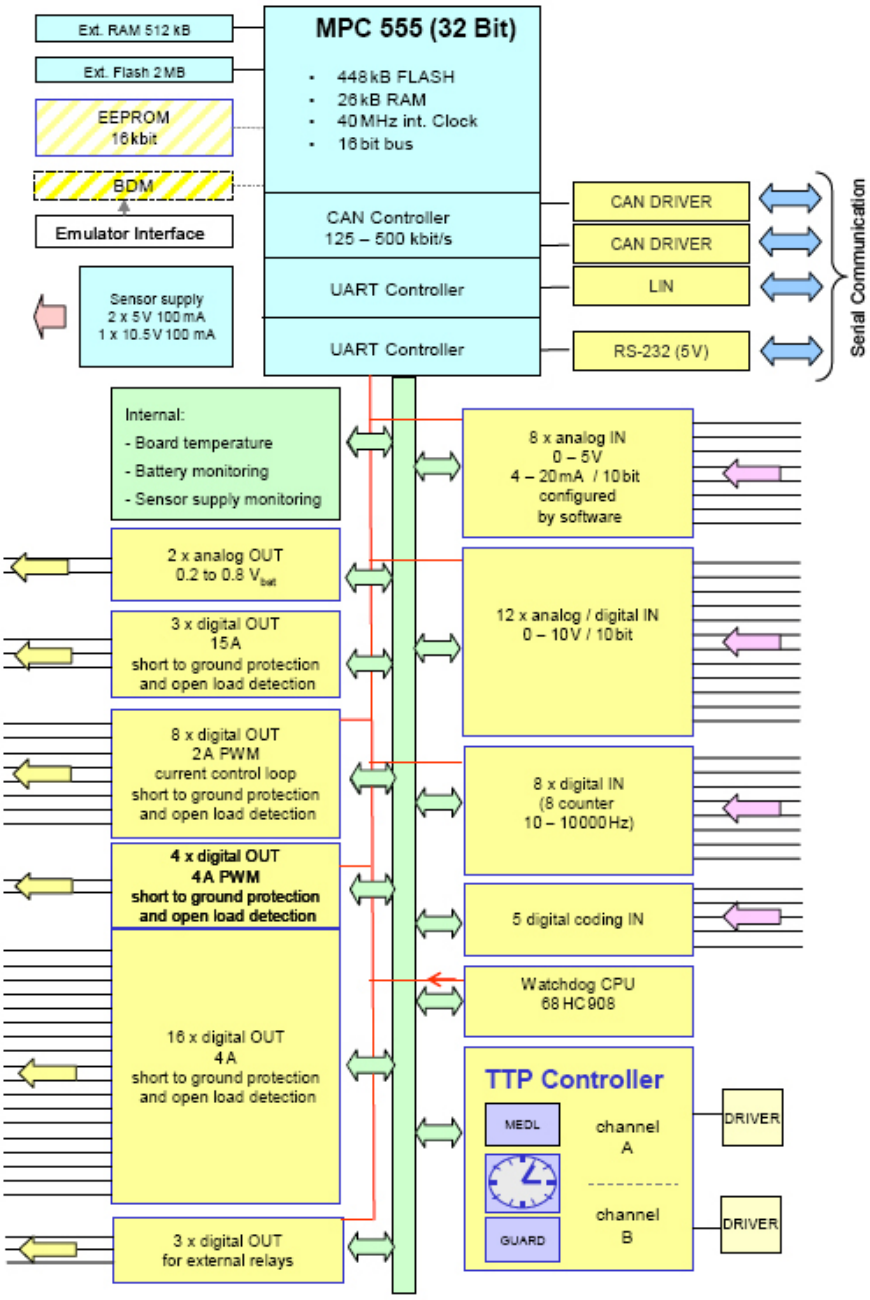

Eaton
Hydraulics Business USA
14615 Lone Oak Road
Eden Prairie, MN 55344
USA
Tel: 952-937-9800
Fax: 952-294-7722
www.hydraulics.eaton.com

Eaton
Hydraulics Business Europe
Route de la Longeraie 7
1110 Morges
Switzerland
Tel: +41 (0) 21 811 4600
Fax: +41 (0) 21 811 4601

Eaton
Hydraulic Business Asia Pacific
11th Floor Hong Kong New World Tower
300 Huaihai Zhong Road
Shanghai 200021
China
Tel: 86-21-6387-9988
Fax: 86-21-6335-3912

Powering Business Worldwide

© 2008 Eaton Corporation
All Rights Reserved

Printed in USA
Document No. E-ELCL-MS009-E
August 2008