Roadranger®

Nomenclature Explained

Automated Transmissions – Heavy-Duty

UltraShift & UltraShift *PLUS*
(new nomenclature rules)

Marketing Name: Fuller UltraShift *PLUS* Linehaul Active Shifting (LAS)

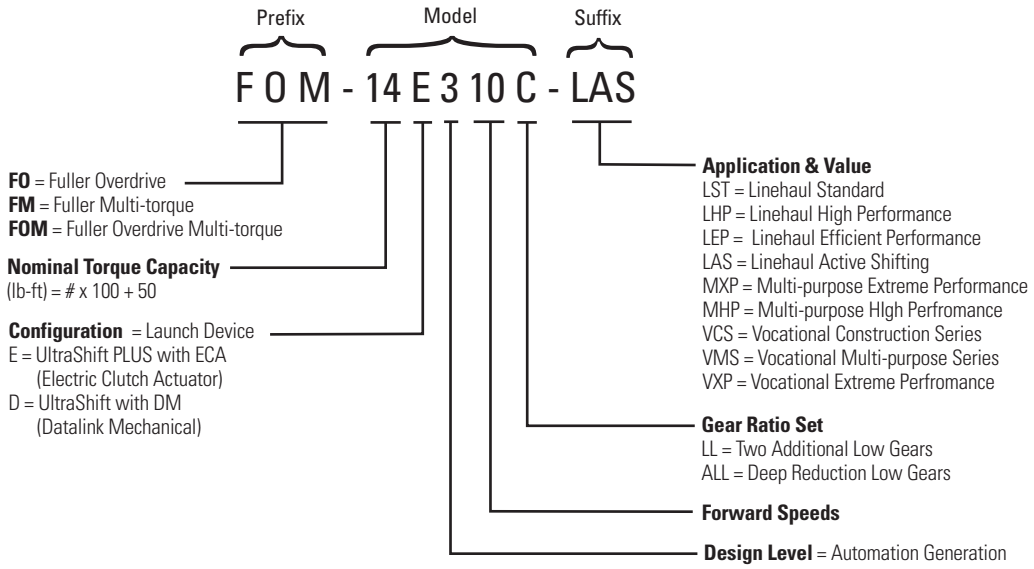

UltraShift & AutoShift
(old nomenclature rules)

Marketing Name: AutoShift 18 Speed RTLO-18918A-AS3

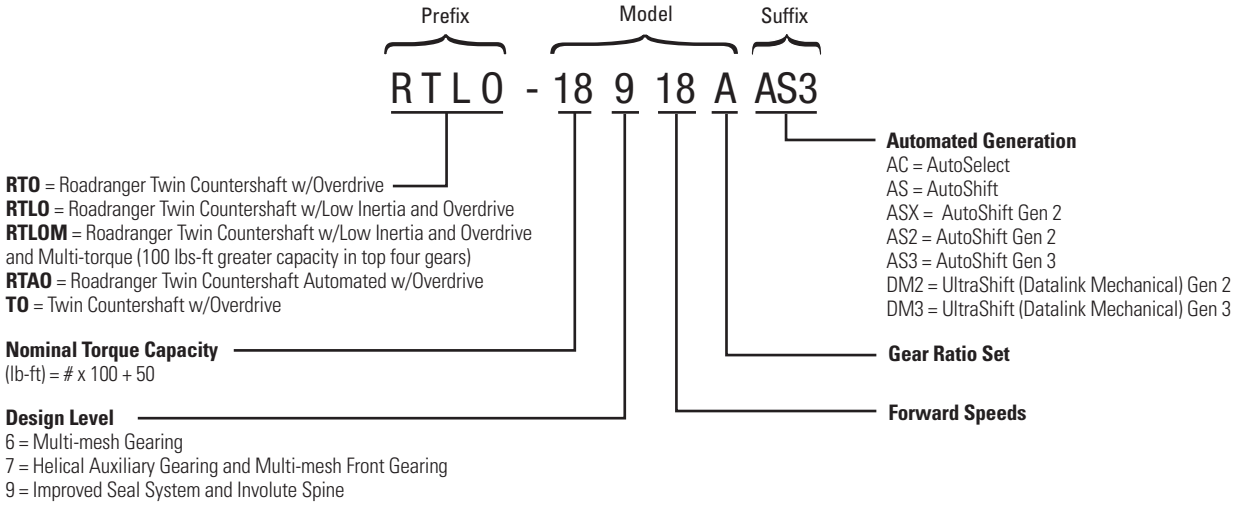

Automated Transmissions – Medium-Duty

Medium-Duty UltraShift & AutoShift
(old nomenclature rules)

Marketing Name: Fuller UltraShift Highway Value (HV)

Prefix | Model | Suffix

F O - 6 5 06 B - DM3

F = Fuller Standard Model
FO = Fuller w/Overdrive

Nominal Torque Capacity
(lb-ft) = # x 100 + 60 for AutoShift
or + 120 for UltraShift HV

Design Level
4 = Base Design
5 = Model w/ Park Pawl

Automated Generation
ASX = AutoShift
ASW = UltraShift Wet Clutch Gen 2
AW3 = UltraShift Wet Clutch Gen 3
DM3 = UltraShift (Datalink Mechanical) Gen 3 - Highway Value

Gear Ratio Set

Forward Speeds

Manual Transmissions – Heavy-Duty

(old nomenclature rules)

Marketing Name: Fuller 9-Speed Manual Transmission

Prefix | Model | Suffix

RTLOC - 16 9 09 A - T2

T = Twin Countershaft
TX = Twin Countershaft w/Overdrive

RT = Roadranger Twin Countershaft
RTF = Roadranger Twin Countershaft w/ Forward Shift Bar Housing
RTO = Roadranger Twin Countershaft w/Overdrive
RTOF = Roadranger Twin Countershaft w/Overdrive & Forward Shift Bar Housing
RTX = Roadranger Twin Countershaft w/Overdrive & Direct Shift Pattern
RTXF = Roadranger Twin Countershaft w/Overdrive, Direct Shift Pattern & Forward Shift Bar Housing
RTL = Roadranger Twin Countershaft w/Low Inertia
RTLO = Roadranger Twin Countershaft w/Low Inertia and Overdrive
RTOC = Roadranger Twin Countershaft w/Overdrive and Convertible Model
RTLOC = Roadranger Twin Countershaft w/Low Inertia, Overdrive and Convertible Model

FR = Fuller Roadranger Twin Countershaft
FRF = Fuller Roadranger Twin Countershaft w/ Forward Shift Bar Housing
FRM = Fuller Roadranger Twin Countershaft w/ Multi-torque
FRO = Fuller Roadranger Twin Countershaft w/Overdrive
FROF = Fuller Roadranger Twin Countershaft w/Overdrive & Forward Shift Bar Housing
FRW = Fuller Roadranger Twin Countershaft w/Cooler-less Option
FRLO = Lightning Models

T2 = Top 2 Gears Automated

Gear Ratio Set
LL = Two Additional Low Gears
ALL = Deep Reduction Low Gears

Forward Speeds

Design Level
2 = FR Series
4 = FRLO (Lightning) Series
5 = Coarse Gearing
6 = Multi-mesh Gearing
7 = Helical Auxiliary Gearing & Multi-mesh Front Gearing
9 = Improved Seal System and Involute Spine

Nominal Torque Capacity
(lb-ft) = # x 100 + 50

Manual Transmissions – Medium-Duty

(old nomenclature rules)

Marketing Name: Fuller 6-Speed Manual Transmission

Prefix | Model | Suffix

FS - 6 4 06 A

FS = Fuller Synchronized
FSO = Fuller Synchronized w/Overdrive
FSB = Fuller Synchronized Bus Model
FSBO = Fuller Synchronized Bus Model w/Overdrive

Gear Ratio Set

Forward Speeds

Design Level
2 = Coarse pitch clutching teeth spline
3 = Fine pitch clutching teeth spline
4 = Boosted synchronizer

Nominal Torque Capacity
(lb-ft) = # x 100 + 60

Hybrid Power Systems

Marketing Name: Eaton Hybrid City Delivery (CD)

Prefix | Model | Suffix

EH - 8 E 3 06 A - CD

Eaton Hybrid

Nominal Torque Capacity
(lb-ft) = # x 100 + 50

Configuration
E = Electric Clutch Actuator

Application & Value
T = Tractor
P = Passenger Transport
UP = Utility w/ePTO
UPG = Utility w/ePTO and APG (Auxiliary Power Generator)
CD = City Delivery
CDR = City Delivery Refuse
CDG = City Delivery w/APG (Auxiliary Power Generator)

Gear Ratio Set

Forward Speeds

Design Level
3 = Base design
6 = Low Profile (with Park Pawl)

Clutch

Prefix | Model | Suffix

109 ### - ## Y

107 = Heavy-Duty ValueLine or Medium-Duty Manual Adjustment
108 = Easy Pedal
109 = Solo
208 = Easy Pedal Advantage™
209 = Solo Advantage™

Y = Solo XL Roller Yoke Adjustment-Free w/Greaseable Bearing
MO = Remanufactured
B = Heavy-Duty ValueLine or 14" Easy Pedal w/o Brake
AM = EverTough

Tandem Drive Axle

D S 40 4 - (P)

D = Forward Tandem Axle with Interaxle Differential

Gearing:
S = Single Reduction
T = Dual Range
P = Planetary Double Reduction
C = Single Reduction with Controlled Traction Differential
D = Single Reduction with Wheel Differential Lock
A = Single Reduction with In Axle Speed Sensing
SS = Super Single Reduction
DS = Super Single Reduction with Wheel Differential Lock
SH = Single Reduction High Performance
DH = Single Reduction with Wheel Differential Lock High Performance

(GAWR x 1000 lbs.)

Design Level

(P) = Optional Lube Pump
P = Standard Lube Pump

D 46 - 1 7 0 D

D = Forward Tandem Axle with Interaxle Differential
R = Rear Tandem Axle
T = Tridem Axle

(GAWR x 1000 lbs.)

Gear Type:
1 = Standard Single Reduction

Head Assembly Series

Design Level

Options:
D = Differential Lock
H = Heavy Wall
N = No Spin
P = Optional Lube Pump
R = Retarder Ready
W = Wide Track

Single Drive Axle

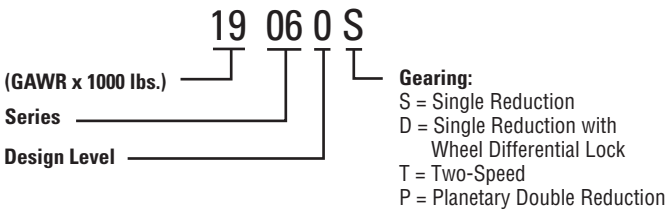

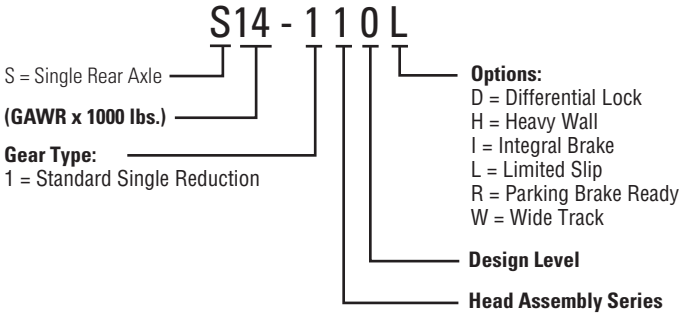

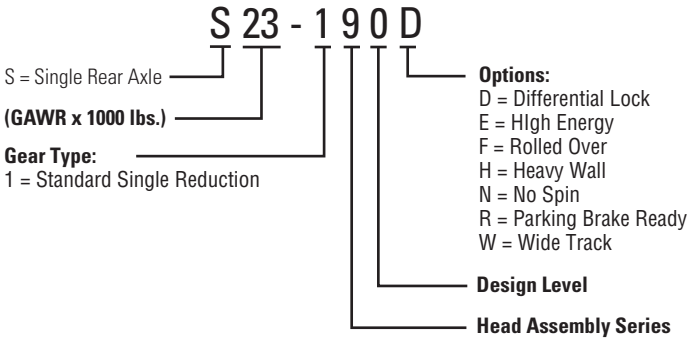

Steer Axle

E - 120 2 I

Series:
E

(GAWR x 100 lbs.)

Beam Type:
I = Beam Standard Overall Width
W = Over 96” Overall Width

Design Level:
0 = Standard
1 = Heavy-Duty Beam
2 = In-Line Drawkeys Heavy-Duty Beam

I - 200 W

Series:
I
D

(GAWR x 100 lbs.)

Beam Type:
F, SG = I-Beam Standard Overall Width
SB = Coach Beam
W = Over 96” Overall Width

Future Design Level

EFA - 24 T 5

Series:
EFA

(GAWR x 1000 lbs.)

Future Design Level

Beam Drop:
1 = 1.5 in. to Tube Centerline
4 = 3.5 in. to Spring Pad
5 = 5.1in. to Tube Centerline

Beam Type:
F = I-Beam Standard Overall Width
T = Tubular Beam

Brake

ES – 150 – 08D

Manufacturer
Bendix Spicer
Foundation Brake LLC

Service
B – Standard Service
S – Extended Service

Drum Diameter
122 – 12.25” [311mm]
150 – 15” [318mm]
165 – 16.5” [419mm]
180 – 18” [457mm]

Shoe Size
04 – 4” [102mm]
05 – 5” [127mm]
06 – 6” [152mm]
07 – 7” [178mm]
07 – 7.5” [191mm]
08 – 8.63” [219mm]
10 – 10” [254mm]

Configurations
A – Fab Shoe Weld on Spider Self-Contained Cam Bracket SAP
B – Fab Shoe Weld on Spider Self-Contained Cam Bracket DAP
D – Fabricated Shoe/Cast Spider SAP
F – Fabricated Shoe Weld on Spider SAP (Non Self-Contained)
H – Cast Shoe/Heavy Cast Spider DAP
L – Fabricated Shoe/Fabricated Spider SAP
M – Fabricated Shoe/Cast Spider (DAP Closed A/P)
P – Fabricated Shoe/Weld on Spider (DAP Closed A/P)
R – Cast Shoe/Heavy Cast Spider SAP
S – Reinforced Fabricated Shoe/Heavy Cast Spider (SAP)
T – Fabricated Shoe/Weld on Spider DAP (Non Self-Contained)

Please reference the Roadranger Spec Guide, item RRSL0001, or visit www.roadranger.com

Roadranger®

DANA | EATON

For spec’ing or service assistance, call 1-800-826-HELP (4357) or visit our web site at www.roadranger.com. In Mexico, call 001-800-826-4357.

Roadranger: Eaton, Dana and other trusted partners providing the best products and services in the industry, ensuring more time on the road.

©2010 Eaton Corporation and Dana Corporation
All rights reserved.Printed in USA · RRSL0002 1110 · 2M/WP

Eaton Corporation • P.O. Box 4013 • Kalamazoo, MI 49003 • U.S.A. • www.roadranger.com