# Eaton Tripp Lite Series SUPDMBP6K

## Installation and User's Manual

**SUPDMBP6K**
**Agency Series: AG-0770**

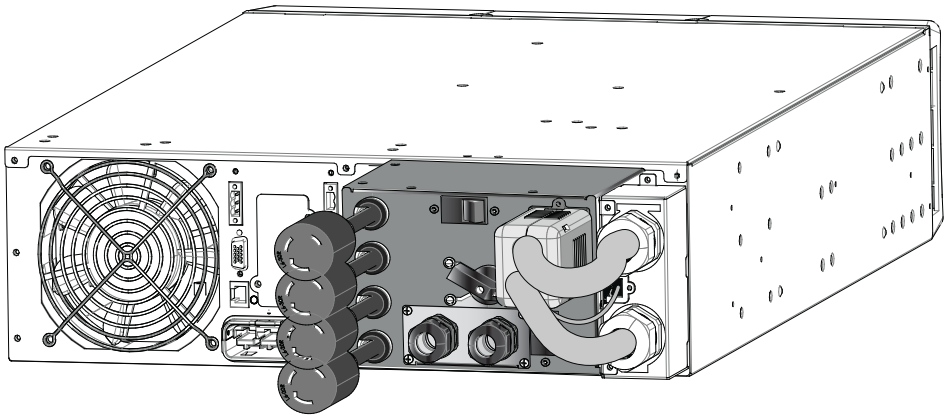

Powering Business Worldwide

p/n: 934705
Revision A

### Safety Instructions

**SAVE THESE INSTRUCTIONS. This manual contains important instructions that should be followed during installation and maintenance of the SUPDMBP6K and the UPS.**

The SUPDMBP6K models that are covered in this manual are intended for installation in a temperature controlled environment free of conductive contaminants.

### Special Symbols

The following are examples of symbols used on the product to alert you to important information:

**RISK OF ELECTRIC SHOCK** - Observe the warning associated with the risk of electric shock symbol.

**CAUTION: REFER TO OPERATOR'S MANUAL** - Refer to your operator's manual for additional information, such as important operating and maintenance instructions.

This symbol indicates that you should not discard waste electrical or electronic equipment (WEEE) in the trash. For proper disposal, contact your local recycling/reuse or hazardous waste center.

©Copyright 2023 Eaton, Raleigh, NC, USA. All rights reserved. No part of this document may be reproduced in any way without the express written approval of Eaton.

### Safety of Persons

- Installation should be performed by QUALIFIED ELECTRICAL SERVICE PERSONNEL ONLY.
- The system has its own power source when connected to the UPS (UPS battery). Consequently, the power outlets may be energized even if the system is disconnected from the AC power source. Dangerous voltage levels are present within the system. It should be opened exclusively by qualified service personnel.
- The system must be properly grounded at all times. Always connect the earth wire first.

### Product Safety

- The connection instructions and operation described in the manual must be followed in the indicated order. Disconnection and overcurrent protection devices shall be provided by QUALIFIED ELECTRICAL SERVICE PERSONNEL for AC in/out circuits.
- CAUTION - To reduce the risk of fire, the unit should only connect to a circuit with 20 or 30 amperes maximum branch circuit overcurrent protection in accordance with the National Electric Code ANSI/NFPA 70 and Canadian Electrical Code, Part 1, C22.1.
- Short Circuit backup protection and overcurrent protection, for the 30A Receptacles, is provided by the building installation.
- To Avoid Risk of Fire Hazard: When hooking up the power cable connections as described in *3.3 Power Cable Connection*, soft soldering of stranded wires is NOT permitted
- The upstream circuit breaker must be easily accessible.
- The unit can be disconnected from AC power source by opening the input circuit breaker, or by shutting down the UPS (refer to the Smartonline UPS User's Manual).
- Check that the indications on the rating plate correspond to your AC powered system and to the actual electrical consumption of all the equipment to be connected to the system.
- Never install the system in an excessively damp environment.
- Never let a foreign body penetrate inside the system.
- Never block the cooling vents of the system.
- Never expose the system to direct sunlight or source of heat.
- If the system must be stored prior to installation, storage must be in a dry place.
- The admissible storage temperature range is -15° C to +60° C.
- The operating temperature range is 0 to 40° C

### Special Precautions

- The SUPDMBP6K is designed to work with approved Eaton Tripp Lite Series UPS systems (contact your Eaton Tripp Lite Series reseller for more information)
- All repairs and service should be performed by AUTHORIZED SERVICE PERSONNEL ONLY. There are NO USER-SERVICEABLE PARTS inside the UPS or Maintenance Bypass Switch.

# Table of Contents

**1 Introduction** ..... **1**
1.1 Introduction ..... 1
1.2 Environmental Protection ..... 1

**2 Presentation** ..... **3**
2.1 Standard Positions ..... 3
2.2 Dimensions ..... 3
2.3 Description / Panels ..... 4
2.4 Inspecting the Equipment ..... 5
2.5 Unpacking the SUPDMBP6K ..... 5
2.6 Checking the Accessory Kit ..... 5

**3 Installation** ..... **7**
3.1 Mechanical Mounting ..... 7
3.2 Installation Requirements ..... 7
3.3 Power Cable Connection ..... 7

**4 Operations** ..... **9**
4.1 UPS Start-UP with SUPDMBP6K Bypass Module ..... 9
4.2 UPS Replacement with SUPDMBP6K Bypass Module ..... 10
4.3 UPS Maintenance with SUPDMBP6K Bypass Module ..... 12

**5 Support** ..... **13**
5.1 Service and Support ..... 13

**6 Specifications** ..... **15**
6.1 Model Specifications ..... 15

# Chapter 1 Introduction

## 1.1 Introduction

Thank you for selecting an EatonTripp Lite Series product to protect your electrical equipment.

The SUPDMBP6K maintenance bypass has been designed with the utmost care.

We recommend that you take the time to read this manual to take full advantage of the many features of your SUPDMBP6K bypass module.

Before installing the SUPDMBP6K with your UPS, please read the safety instructions. Then follow instructions in this manual.

To discover the entire range of Eaton Tripp Lite Series products, we invite you to visit our web site at TrippLite.eaton.com or contact your EatonTripp Lite representative.

## 1.2 Environmental Protection

Eaton products have implemented an environmental-protection policy.

Products are developed according to an eco-design approach.

**Substances**

This product does not contain CFCs, HCFCs, or asbestos.

**Packing**

To improve waste treatment and facilitate recycling, separate the various packing components.

- The cardboard we use comprises over 50% of recycled cardboard.
- All bags are made of polyethylene.
- Packing materials are recyclable and bear the appropriate identification symbol 01 PET

**Table 1. Packing Material Symbols**

| Materials | Abbreviations | Number in the symbols |
|---|---|---|
| Polyethylene terephthalate | PET | 01 |
| High-density polyethylene | HDPE | 02 |
| Polyvinyl chloride | PVC | 03 |
| Low-density polyethylene | LDPE | 04 |
| Polypropylene | PP | 05 |
| Polystyrene | PS | 06 |

Follow all local regulations for the disposal of packing materials.

**End of Life**

Eaton will process products at the end of their service life in compliance with local regulations. Eaton works with companies in charge of collecting and eliminating our products at the end of their service life.

**Product**

The product is made up of recyclable materials.

Dismantling of the bypass module must done in compliance with all local regulations concerning waste. At the end of its service life, the product must be transported to a processing center for electronic waste.

**Benefits**

The SUPDMBP6K bypass module makes it possible to service or even replace the UPS without affecting the connected loads (HotSwap function).

Providing outstanding reliability, the Tripp Lite Series SUPDMBP6K bypass module unique benefits include:

- Easy and fast connection to UPS due to Input/Output and signal "all in one" patented connector.
- **"Make before Break"** feature to allow full servicing (electrical power continuity) when switching from the UPS position to the Bypass position (and vice versa).
- Communication feature with UPS*: detection of the UPS connection and switch position (Normal or Bypass).
- Load connection by hardwired terminal blocks and locking receptacle cords two NEMA 20 A L6–20R and two NEMA (30 A L6-30R) cordsets.
- Adjustable 19'' rack kit and multiple positions tower installation kit provided.
- Backed by worldwide agency certifications.

# Chapter 2 Presentation

## 2.1 Standard Positions

**Figure 1. SUPDMBP6K Installation Options**

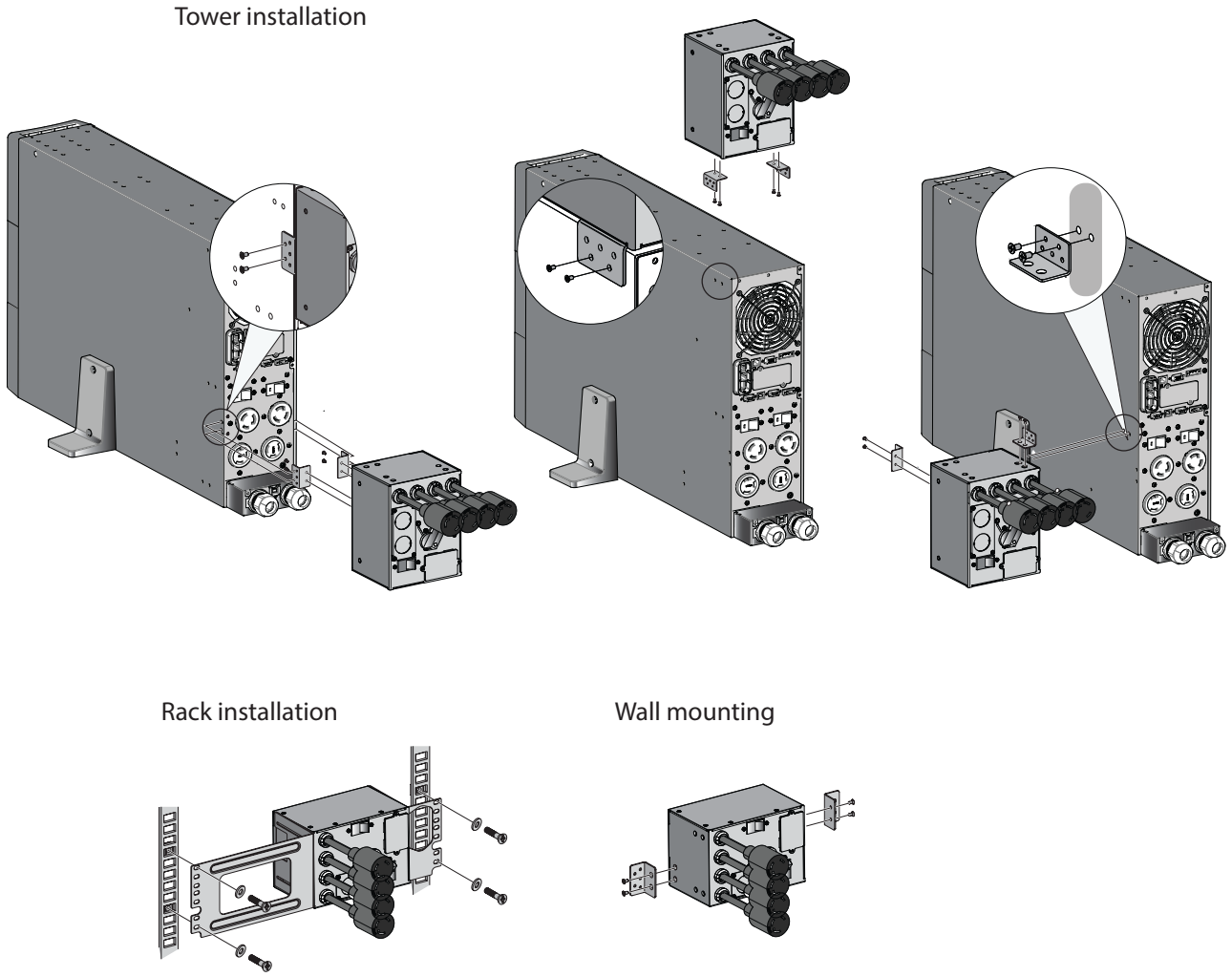


## 2.2 Dimensions

| Description | Weight (lb/ kg) | Dimensions (inch/mm) D x W x H |
|---|---|---|
| SUPDMBP6K | **5.5** / 2.5 | **4.3 x 7.0 x 5.1** / 110 x 177 x 130 |

## 2.3 Description / Panels

The SUPDMBP6K has a manual rotary bypass switch with two positions:

- **UPS**: the load is supplied by the UPS.
- **Bypass**: the load is supplied directly by the AC source.

Two lights that indicate the SUPDMBP6K power status:

- **"UPS"** green LED: when active, the UPS output is available, the bypass switch can be safely turned to the UPS position.
- **"BYPASS"** red LED: when active, indicates that the SUPDMBP6K is on "Bypass mode" (The bypass switch is turned to the bypass position).

**UPS input switch**

Switches off the AC source to the UPS for maintenance or replacement.

**SUPDMBP6K status detection:**

A signal cable, with RJ11 connector to plug to the UPS, allows the communication to the UPS to manage the SUPDMBP6K status, and the indication on UPS display panel of both following status:

- SUPDMBP6K connection to UPS.
- Manual bypass switch position.

Check the Smartonline UPS User's Manual to check the compatibility of this feature, or contact Tripp Lite for more information.

**Figure 2. SUPDMBP6K**

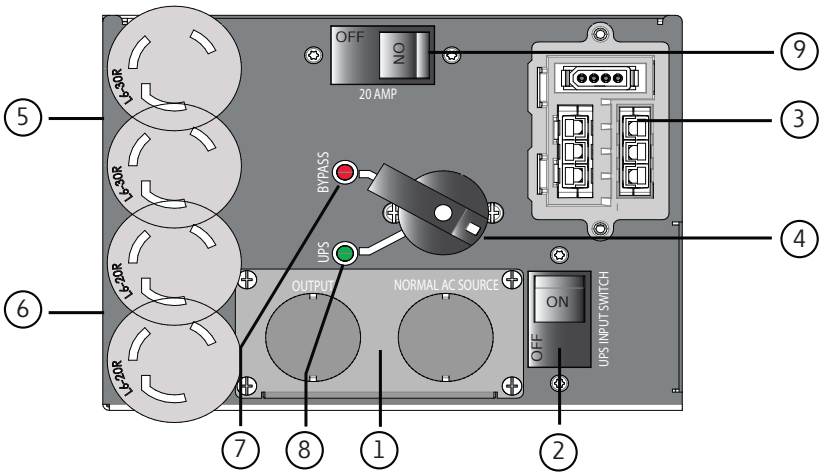


1. Input / Output terminal blocks
2. UPS input switch
3. Input / Output detection connector to UPS
4. Manual bypass switch
5. (2) L6-30 locking receptacle cords
6. (2) L6-20 locking receptacle cords
7. "Bypass" mode red LED
8. UPS mode green LED
9. 20A double pole 250V breaker

## 2.4 Inspecting the Equipment

If any equipment has been damaged during shipment, keep the shipping cartons and packing materials for the carrier or place of purchase and file a claim for shipping damage. If you discover damage after acceptance, file a claim for the concealed damage.

To file a claim for shipping damage or concealed damage:

1. File with the carrier within 15 days of receipt of the equipment.
2. Send your service representative a copy of the damage claim within 15 days. See 5.1 *Service and Support*.

## 2.5 Unpacking the SUPDMBP6K

Unpack the equipment and remove all of the packing materials and shipping cartons.

Discard or recycle the packaging responsibly, or store it for future use. Place the SUPDMBP6K in a protected area with adequate airflow free of humidity, flammable gas, and corrosion.

**NOTE** Packing materials must be disposed of in compliance with all local regulations concerning waste. Recycling symbols are printed on the packing materials to facilitate sorting.

## 2.6 Checking the Accessory Kit

Verify that the following additional items are included with the SUPDMBP6K:

**Figure 3. SUPDMBP6K**

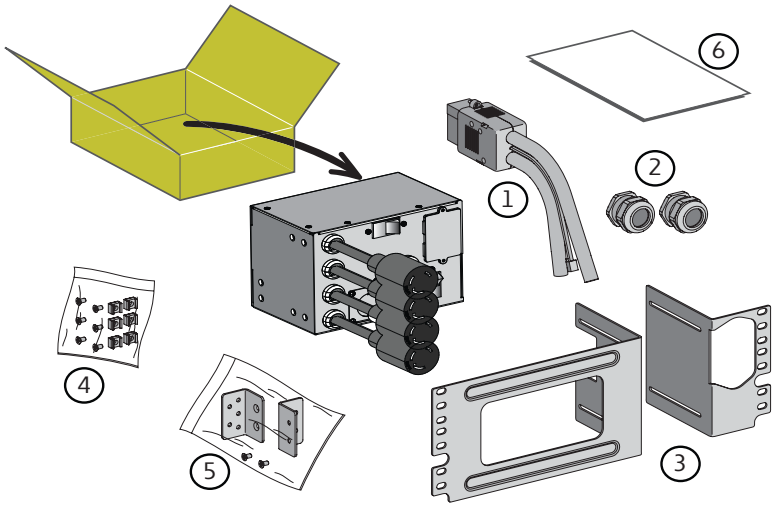


1. Input / Output UPS cord set
2. (2) cable glands
3. Rack kit for 19 inch enclosures
4. Fixation kit for rack mounting (including square nuts and screws)
5. Tower and wall mounting kit (inclusing 2 ears and screws)
6. Installation and user manual

# Chapter 3 Installation

## 3.1 Mechanical Mounting

To mount the SUPDMBP6K on the UPS, in the rack or on the wall, see 2.1 *Standard Positions* .

## 3.2 Installation Requirements

**NOTE 1** Refer to the Smartonline UPS User's Manual for the circuit breaker current ratings.

**NOTE 2** The circuit breaker has to be installed upstream the SUPDMBP6K normal AC source.

**Table 2. Recommended Wire Sizes**

| | Terminal position | Wire function | Terminal wire size rating | Minimum input wire size rating | Tightening torque |
|---|---|---|---|---|---|
| SUPDMBP6K | L1 | phase | 0.5-10 mm2 (20-8 AWG) | 6 mm2 (10 AWG) 105° C 10 mm2 (8 AWG) 75° C | 12 lb in |
| | L2 | phase | | | |
| | ⏚ | ground | | | |
| Copper wire, solid or stranded. | | | | | |

## 3.3 Power Cable Connection

**WARNING**

This type of connection must be carried out by QUALIFIED ELECTRICAL SERVICE PERSONNEL.

Before carrying out any connection to the SUPDMBP6K, check that the upstream protection device (normal AC source) is open "O" (Off).

Before proceeding to connect the SUPDMBP6K to the UPS, make sure the UPS has been properly shut down (refer to the Smartonline UPS User's Manual).

Always connect the ground wire first.

1. Remove the L6-30P input power cable from the UPS I/O terminal blocks, refer to the Smartonline UPS User's Manual for UPS I/O terminal blocks cover access.
2. Refer to Figure 4 and connect the two power cables of the I/O cord set to the UPS I/O terminal blocks, following color coding on the cables and the UPS I/O cover (blue for UPS Input / red for UPS Output). Refer to the Smartonline UPS User's Manual to check the UPS terminal blocks connection.

**NOTE** Soft soldering of stranded wires is not permitted.

3. Connect the detection cable from the I/O cord set to the UPS (refer to Smartonline UPS User's Manual).
4. Remove the bypass module I/O cover by removing the four screws to access the terminal blocks.
5. Punch out the knockouts and insert the provided cables/conduits inside.

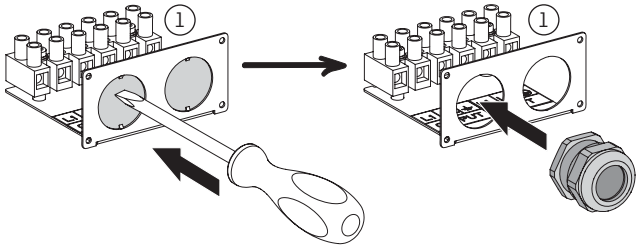


6. Insert the L6-30P input power cable through the cable gland.
7. Connect the wires to the Normal AC source (Input) terminal blocks.
8. Insert the output cable through the cable gland.
9. Connect the wires to the output terminal blocks.
10. Tighten the cable glands.
11. Slide back and secure the SUPDMBP6K I/O cover with the four screws.
12. Connect the I/O cord set connector to the SUPDMBP6K, and secure it by tightening the two locking screws.

**Figure 4. Power Cable Connections**

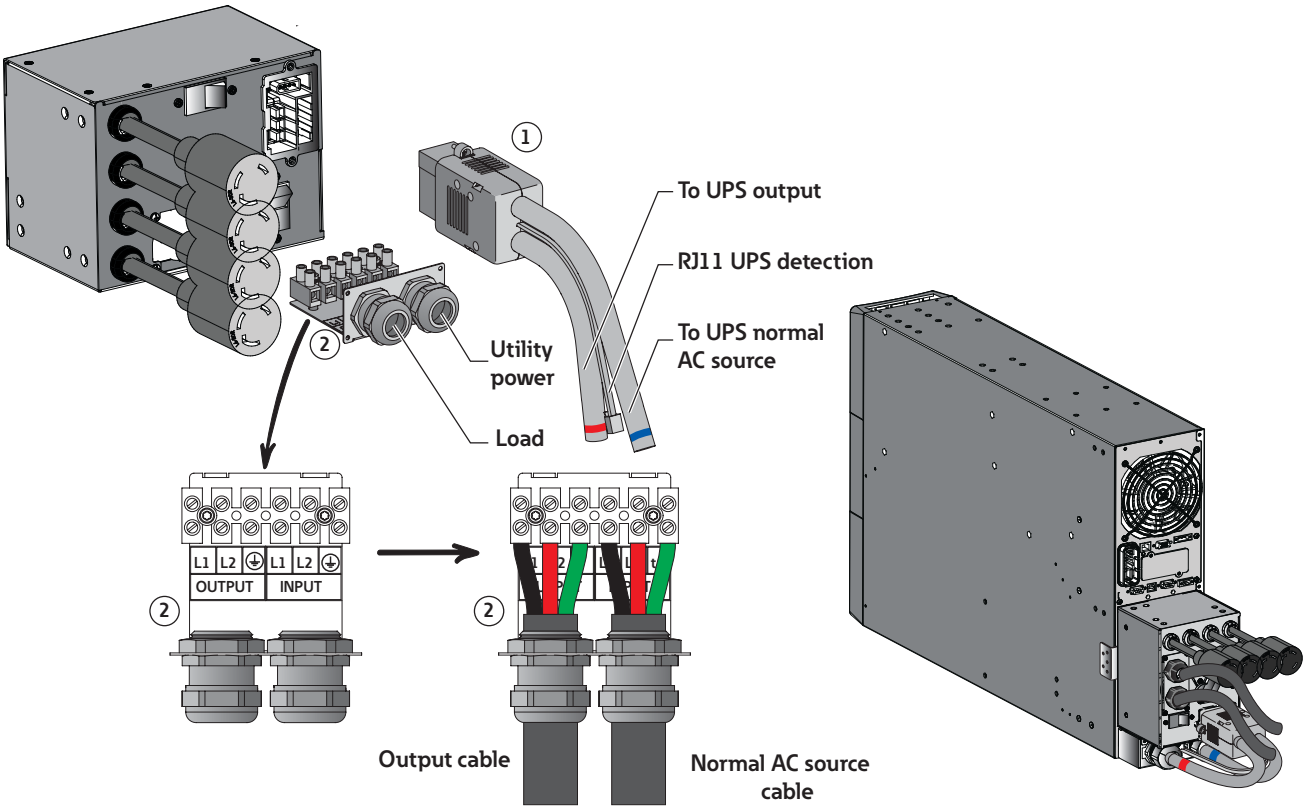

# Chapter 4 Operations

## 4.1 UPS Start-UP with SUPDMBP6K Bypass Module

Verify that the load equipment ratings do not exceed the UPS capacity to prevent an overload alarm.

1. Check that the UPS is correctly connected to the bypass module (see 3.3 *Power Cable Connection*).

**NOTE** Do not connect any load equipment to the UPS outlets. Loads can only be connected to the SUPDMBP6K outlets or hardwired output terminal blocks.

2. Verify that the bypass module terminal block wiring is connected to the AC input and output source.
3. Check that the Manual bypass switch is set to the BYPASS position.

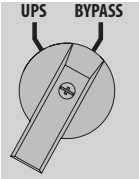


4. Set the upstream circuit breaker (not provided) to the "I" position (On) to switch On the utility power.
5. Verify that the red BYPASS LED illuminates, indicating that the AC source now powers the load.
6. Set the UPS input switch of the bypass module to the On position.
7. Verify that the UPS is correctly powered and the UPS display panel illuminates (refer to the Smartonline UPS User's Manual).
8. Press and hold the UPS On button for three seconds to start the UPS.
9. Put the UPS in internal Bypass mode (refer to the Smartonline UPS User's Manual).
10. Verify that the UPS is on Bypass mode by checking UPS display panel (refer to the Smartonline UPS User's Manual).
11. Verify that the green UPS LED on the bypass module illuminates, indicating that UPS output power is available on the bypass module.

**IMPORTANT**

Do not continue to the next step if the green UPS LED on the bypass module is Off or the load will be lost.

12. Set the Manual bypass switch to the UPS position: the BYPASS LED will turn Off indicating that the load is now powered by the UPS.

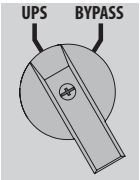


13. Put the UPS in Normal mode (refer to the Smartonline UPS User's Manual).

14. Check that the UPS is in Online mode by checking UPS display panel (refer to the Smartonline UPS User's Manual) the load is now protected by the UPS.

## 4.2 UPS Replacement with SUPDMBP6K Bypass Module

To disconnect the UPS from the bypass module follow the steps in this section.

1. Put the UPS in internal Bypass mode (refer to the Smartonline UPS User's Manual).
2. Verify that the UPS is on Bypass mode by checking UPS display panel (refer to the Smartonline UPS User's Manual).
3. Set the Manual bypass switch to “BYPASS” position. The red “BYPASS” LED will turn On indicating that the load is supplied directly by AC source.

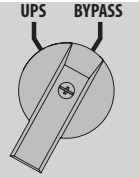


4. Switch the UPS input switch to the Off position and wait 30 seconds.
5. Wait for the UPS fans to stop and the display to turn off, the UPS can now be disconnected, as described below:
   - Loosen the two screws that hold the I/O cord set in place on the bypass module, and then disconnect the cable.

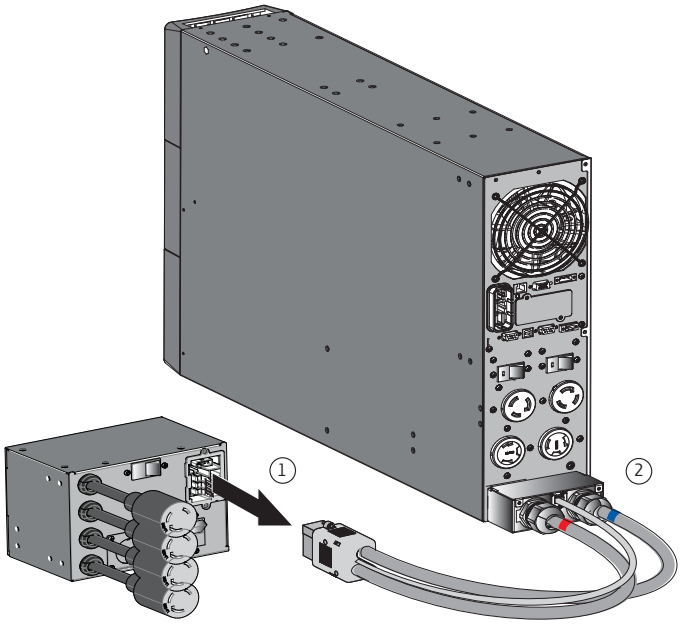


   - Remove the screws that hold the UPS I/O terminal block access cover in place.

- After opening the UPS I/O terminal blocks cover, verify hazardous voltage is no longer present on UPS terminal blocks by using an electrical safety tester.

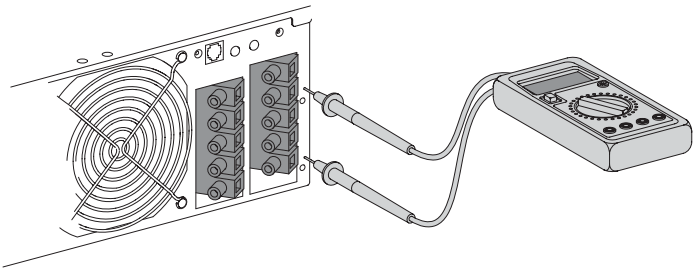

- Disconnect the two power cables, and the bypass module detection cable from the UPS.
- Disconnect all accessories, i.e., EBM, Network communications card (if applicable) that are connected to the UPS (refer to the Smartonline UPS User's Manual).
- Once all accessories have been disconnected the UPS can be replaced.

**WARNING**

Hazardous voltage and lost load risk: do not manipulate the manual bypass switch without the UPS connected via the I/O cord set.

**Return to Normal Operation**

Connect the bypass module and the UPS wiring as directed below:

1. Connect the two bypass module power cables to the UPS followed by the bypass module detection cable see *3.3 Power Cable Connection* for more details.
2. Connect the I/O cord set connector to the bypass module, and secure it by fixing the two locking screws.
3. Connect all accessories, i.e., EBM, Network communications card (if applicable), that need to be connected to the UPS (refer to the Smartonline UPS User's Manual).
4. Set the UPS input switch of the bypass module to the "On" position see Figure 2 .
5. Verify the UPS fans turn on and the display illuminates (refer to the Smartonline UPS User's Manual).
6. Press and hold the UPS power button for 3 seconds to start the UPS (refer to the Smartonline UPS User's Manual).
7. Put the UPS in internal Bypass mode (refer to the Smartonline UPS User's Manual).
8. Verify that the UPS is in Bypass mode by checking UPS display panel (refer to the Smartonline UPS User's Manual).
9. Verify that the UPS green LED illuminates, indicating that the UPS output power is available on the bypass module see Figure 2 .

**IMPORTANT**

Do not continue to the next step if the green UPS LED is Off or the load will be lost.

10. Set the Manual bypass switch to the UPS position: the BYPASS LED will turn Off indicating that the load is now powered by the UPS see Figure 2 .

11. Put the UPS in Normal mode (refer to the Smartonline UPS User's Manual).
12. Check that the UPS is in Online mode by checking UPS display panel (refer to the Smartonline UPS User's Manual).

## 4.3 UPS Maintenance with SUPDMBP6K Bypass Module

**To go to maintenance Bypass operation (follow the MANDATORY steps below):**

1. Put the UPS in internal Bypass mode (refer to the Smartonline UPS User's Manual),
2. Verify that the UPS is on Bypass mode by checking UPS display panel (refer to the Smartonline UPS User's Manual).
3. Set the Manual bypass switch to BYPASS position. The red BYPASS LED will illuminate indicating that the load is powered directly by the utility source.

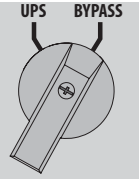


4. The UPS can now be safety serviced. If the UPS needs to be replaced see *4.2 UPS Replacement with SUPDMBP6K Bypass Module*.

**Return to Normal Operation.**

1. Verify that the UPS is on Bypass mode by checking UPS display panel (refer to the Smartonline UPS User's Manual).
2. Verify that the green UPS LED light is illuminated, indicating that the UPS output power is available on the bypass module.

**IMPORTANT**

Do not continue to next the step if the green UPS mode LED is Off or the load will be lost.

3. Set the Manual bypass switch to the UPS position: the BYPASS LED turns Off indicating that the load is now powered by the UPS.

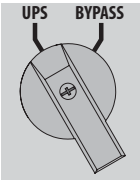


4. Put the UPS in Normal mode (refer to the Smartonline UPS User's Manual).
5. Check that the UPS is in Online mode by checking UPS display panel ensuring the load is protected by the UPS (refer to the Smartonline UPS User's Manual).

# Chapter 5 Support

## 5.1 Service and Support

If you have any questions or problems with the UPS, call your **Local Distributor** or **Eaton Support** at one of the following telephone numbers and ask for a UPS technical representative.

| | |
|---|---|
| United States: | **1–800–356–5737** |
| Canada: | **1–800–461–9166 ext 260** |
| All other countries: | **Call your local service representative** |

Please have the following information ready when you call Eaton Support:

- Model number
- Serial number
- Version number (if available)
- Date of failure or problem
- Symptoms of failure or problem
- Customer return address and contact information

If repair is required, you will be given a Returned Material Authorization (RMA) number. This number must appear on the outside of the package and on the Bill Of Lading (if applicable). Use the original packaging or request packaging from Eaton Support or your local distributor. Units damaged in shipment as a result of improper packaging are not covered under warranty. A replacement or repair unit will be shipped, and freight prepaid for all units within the warranty period.

**NOTE** For critical applications, immediate replacement may be available. Call **Eaton Support** for the dealer or distributor nearest you.

# Chapter 6 Specifications

## 6.1 Model Specifications

**Table 3. Input Connection**

| SUPDMBP6K input connection | |
|---|---|
| SUPDMBP6K | Terminal blocks |

**Table 4. Output Connection**

| SUPDMBP6K output connections | |
|---|---|
| Two L6-30 cords + terminal blocks | Two L6-20 cords + terminal blocks |

**Table 5. Dimensions**

| SUPDMBP6K overall dimensions | |
|---|---|
| D x W x H (**inch /** mm) | **5.6 x 7.0 x 5.1** /<br>142 x 177 x 130 |

**Table 6. Weight**

| SUPDMBP6K weight | |
|---|---|
| Weight lb / (kg) | 5.5 / 2.5 |

**Table 7. Performance**

| SUPDMBP6K performance | |
|---|---|
| Nominal voltage | 200 - 240 V |
| Frequency | 50/60 Hz |
| Input nominal Current | 25A |
| Maximal power | 6000VA |

**Table 8. Standards**

| SUPDMBP6K standards | |
|---|---|
| Safety standards (Canada) | CAN/CSA-C22.2 No. 107.3-14 (3rd Ed)+GI1 (R:2017-10) |
| Safety standards (U.S.) | UL1778:2014 (5th Ed) R10.17 |

**Table 9. Environmental**

| SUPDMBP6K environmental performance | |
|---|---|
| Operating temperature | 0 to 40° C (32 to 104° F) |
| Storage temperature | -15 to 60° C (5 to 140° F) |
| Transit temperature | -25 to 55° C (-13 to 130° F) |

**Table 9. Environmental (Continued)**

| SUPDMBP6K environmental performance | |
|---|---|
| Humidity | 0 to 95% no condensing |
| Operation altitude | Up to 3,000 meters (9,843 ft) above sea level with 10% derating per 1000 meters |
| Transit altitude | Up to 10,000 meters (32,808 ft) above sea level |

**Table 10. Recommended Upstream Protection**

| SUPDMBP6K over current protection | |
|---|---|
| UPS power rating | Upstream circuit breaker |
| 5000VA | D curve - 30A |
| 6000VA | D curve - 30A |

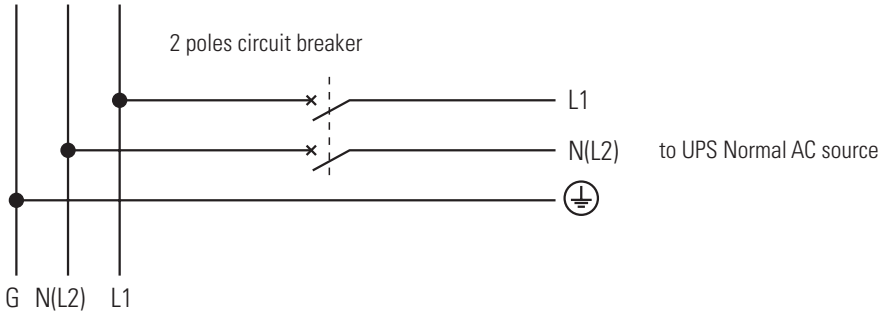

934705 A