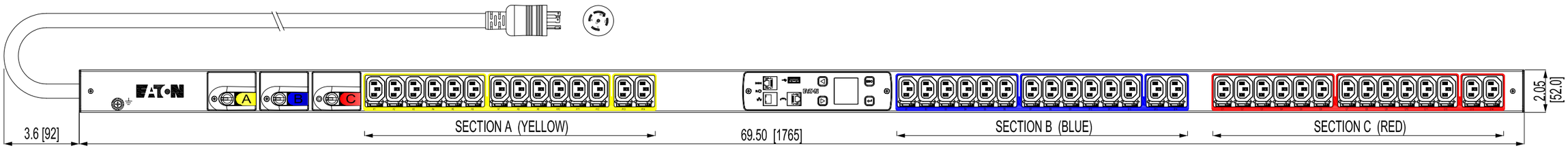

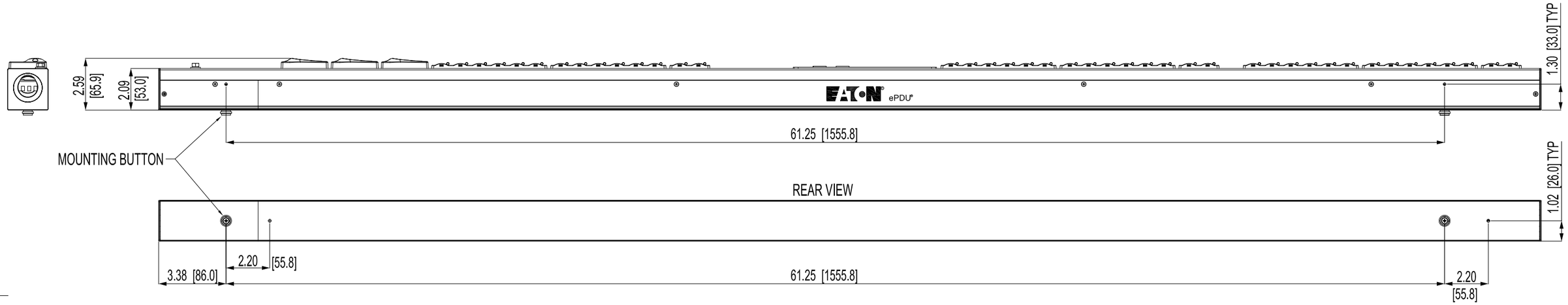

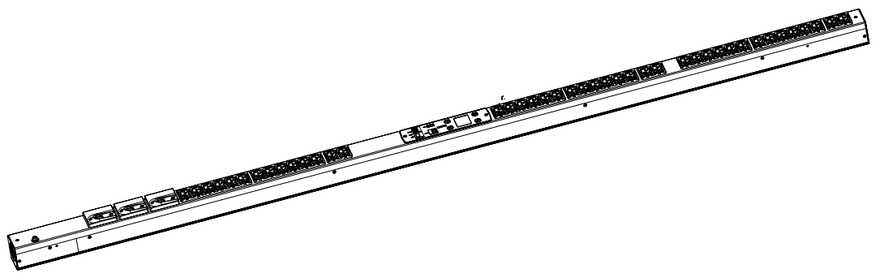

EMI314-10
G3 METERED INPUT

FUNCTIONALITY	INPUT	OUTPUT	OPERATING TEMPERATURE
CURRENT, POWER, AND ENERGY METERING FOR INPUT AND BRANCH	NEMA L21-30P 10FT 10AWG / 5C POWERCORD	(42) IEC 60320 C13 GRIP	32° TO 140° F 0° TO 60° C
MECHANICAL	**INPUT RATING**	**OUTPUT RATING**	**CERTIFICATIONS**
69.50" (1765mm) LENGTH 2.05" (52mm) WIDTH 2.09" (53mm) DEPTH ALUMINUM CHASSIS, BLACK	120/208V~ WYE 3W+N+PE 24A 50/60HZ	200-240V~ 15A PER OUTLET 16A MAX PER SECTION 24A MAX PER PHASE	c UL us LISTED
CIRCUIT BREAKERS	**FILTER AND SPIKE/SURGE**	**ACCESSORIES**	**CONFIGURATION**
(3) 20A 2-POLE LISTED	NONE	INCLUDED SPK012 - INSTALLATION INCLUDED SPK013 - NETWORK OPTIONAL EMP001 - ENVIRONMENTAL PROBE	EMI3PD15JGL79A1

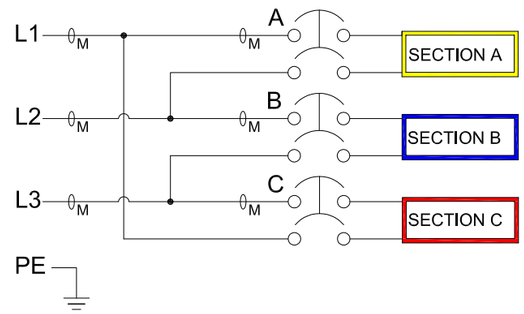

TITLE	ePDU G3 SPECIFICATION EMI314-10		DRAW	J. SMITH 2014-01-07
			DESIGN	
DWG NO.	EMI3PD15JGL79A1_SP REV 001		CHECKED	
MATERIAL			SAFETY	
COATING			APPROVED	
UNITS	in[mm]	A3	SCALE 1:5	EATON ELECTRICAL SECTOR
SHEET	1/1			