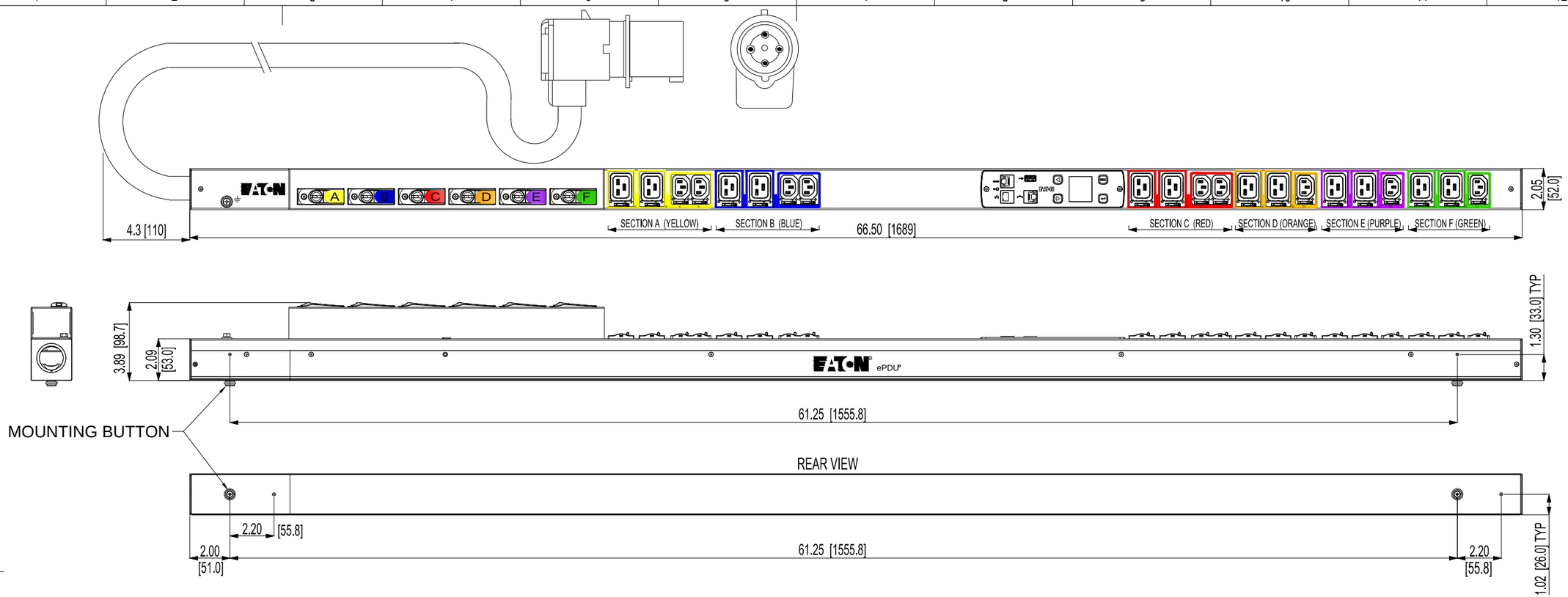

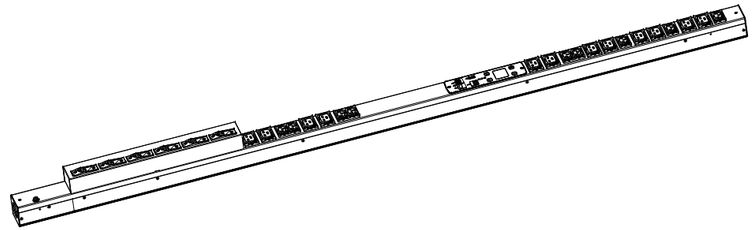

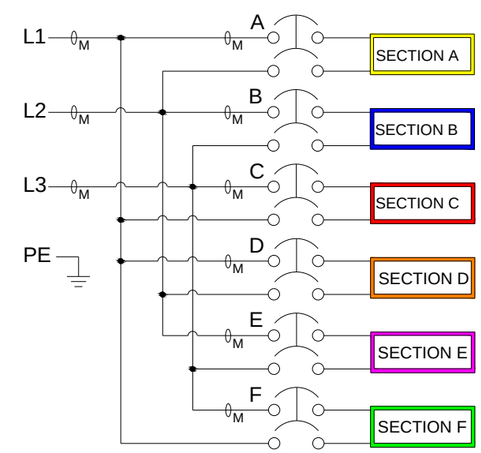

EMI368-06
G3 METERED INPUT

FUNCTIONALITY	INPUT	OUTPUT	OPERATING TEMPERATURE
CURRENT, POWER, AND ENERGY METERING FOR INPUT AND BRANCH	IEC 460P9W-90DEG 6FT 6AWG / 4C POWERCORD	(9) IEC 60320 C13 GRIP (12) IEC 60320 C19 GRIP	32° TO 140° F 0° TO 60° C
MECHANICAL	**INPUT RATING**	**OUTPUT RATING**	**CERTIFICATIONS**
66.50" (1689mm) LENGTH 2.05" (52mm) WIDTH 2.09" (53mm) DEPTH ALUMINUM CHASSIS, BLACK	200-240V~ DELTA 3W+PE 48A 50/60HZ	200-240V~ 15A PER C13 16A PER C19 16A MAX PER SECTION 48A MAX PER PHASE	c UL us LISTED
CIRCUIT BREAKERS	**FILTER AND SPIKE/SURGE**	**ACCESSORIES**	**CONFIGURATION**
(6) 20A 2-POLE LISTED	NONE	INCLUDED SPK012 - INSTALLATION INCLUDED SPK013 - NETWORK OPTIONAL EMP001 - ENVIRONMENTAL PROBE	EMI3DK43JJD78A1 SERIAL NUMBER B672_____

TITLE	ePDU G3 SPECIFICATION EMI368-06	DRAW	R. SIEGFRIED 10 AUG 2015
		DESIGN	
DWG NO.	EMI3DK43JJD78A1 REV 002	CHECKED	
MATERIAL		SAFETY	
COATING		APPROVED	
UNITS	in[mm]	A3	SCALE 1:5
SHEET	1/1		

EATON ELECTRICAL SECTOR

TC-RDW-49-19 REV E

MECHANICAL