Low-voltage power distribution and control systems > Busway >

Low-voltage busway—Pow-R-Way III

Contents

General Description 24.1-2
- Overview 24.1-2
- Standards 24.1-2
- Construction Details 24.1-3

Fittings 24.1-8
- Fittings 24.1-8
- Elbows 24.1-9
- Flanges 24.1-13
- Offsets 24.1-15
- Tees 24.1-17
- Crosses 24.1-18
- Tap Boxes 24.1-19
- Weatherheads 24.1-21
- Expansion Joints 24.1-22
- Phase Transpositions 24.1-22
- Transformer Taps 24.1-23
- Transformer Throat Connections 24.1-24
- Reducers 24.1-25
- Meter Center Power Takeoffs 24.1-26
- Busway-Connected Panelboards 24.1-29
- Pow-R-Way III Adapters 24.1-30
- Wall/Floor/Roof Flanges and End Closers 24.1-31
- Hangers 24.1-32

Devices 24.1-35
- Plug-In Protective Devices 24.1-35
- Surge Protective Device (SPD) Plug-In Devices 24.1-37
- Power Takeoffs 24.1-40
- Receptacle Plug-In Devices 24.1-41

Layout 24.1-42
- Construction Drawing 24.1-42
- Installation Data 24.1-43
- Final Field Fit Program 24.1-44

Application Data 24.1-45
- Bus Duct Electrical Data 24.1-45
- Plug-In Device Electrical Data 24.1-48
- Bus Duct Physical Data 24.1-50
- Plug-In Device Physical Data 24.1-54

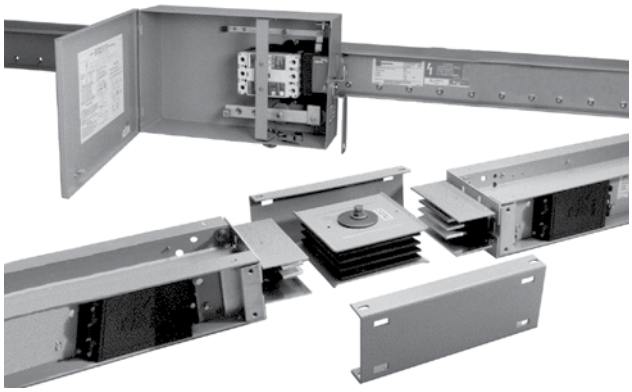

Powering Business Worldwide

More about this product
Eaton.com/busway

Complete library of design guides
Eaton.com/designguides

Overview

Eaton's Pow-R-Way III is a 600 V, totally enclosed, non-ventilated, sandwich bus design available with copper bus bars in ratings from 225–5000 A or with aluminum bus bars from 225–4000 A. Pow-R-Way III is available in outdoor feeder, indoor feeder, indoor plug-in and indoor sprinkler-proof configurations. All four types can be used interchangeably without adapters or special splice plates provided they are of the same current and system rating. The short-circuit withstand ratings for plug-in busway are equal to those of indoor and outdoor feeder busway.

Standards

Pow-R-Way III meets the requirements of NEMA®, UL® 857, CSA® C22.2 No. 27-94, IEEE®, ANSI, IEC, CE and is manufactured in an ISO® 9001 certified facility.

Pow-R-Way III is also certified for Seismic Withstand Capability in accordance with the earthquake requirements as specified in both the International Building Code (IBC) and the California Building Code. Pow-R-Way III exceeds the worst-case Zone 4 required levels and meets all applicable seismic standards for the International Building Code (IBC).

IEC Standards

Pow-R-Way III busway is self certified for all ratings and KEMA certified on select ratings to conform to the following IEC standards: EN 60439-1:1999+A1:2004, EN 60439-2:2000-03 and EN 60529.

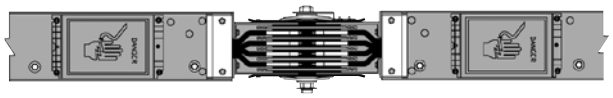

Figure 24.1-1. Pow-R-Way III Joint Design

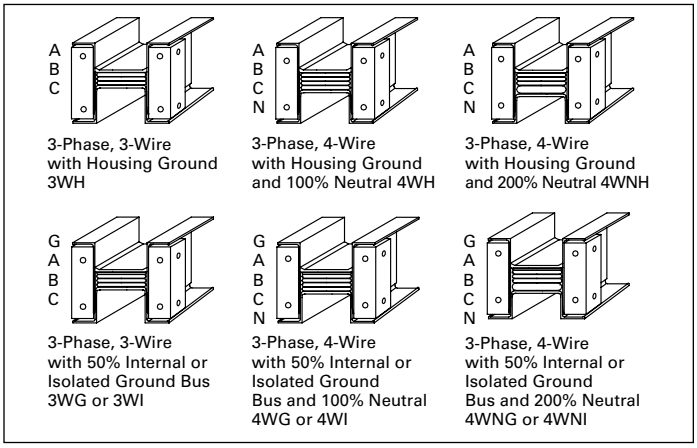

Figure 24.1-2. Conductor Configurations

Table 24.1-1. Pow-R-Way Designations, See Figure 24.1-2

Available Conductor Including Grounding Configurations and Neutral Options	
3WG	Three-phase, three-wire, 50% internal ground
3WI	Three-phase, three-wire, 50% isolated internal ground
3WH	Three-phase, three-wire, 50% integral housing ground
3WHG	Three-phase, three-wire, 100% ground ①
4WG	Three-phase, four-wire, 50% internal ground, 100% neutral
4WI	Three-phase, four-wire, 50% isolated internal ground, 100% neutral
4WH	Three-phase, four-wire, 50% integral housing ground, 100% neutral
4WHG	Three-phase, four-wire, 100% ground ①, 100% neutral
4WNG	Three-phase, four-wire, 50% internal ground, 200% neutral
4WNI	Three-phase, four-wire, isolated internal ground, 200% neutral
4WNH	Three-phase, four-wire, 50% integral housing ground, 200% neutral
4WNHG	Three-phase, four-wire, 100% ground ①, 200% neutral

① 100% ground consists of the 50% integral housing ground combined with a 50% internal ground bus.

KEMA Certification

Pow-R-Way III busway has been certified by KEMA for the following IEC 439-2 subclauses:

Table 24.1-2. IEC 61439-6 Type Tests

IEC 439-6 Subclause	Description
10.2.2	Resistance to corrosion
10.2.3.1	Thermal stability
10.2.3.2	Resistance to abnormal heat and fire due to internal electric effects
10.2.4	Resistance to ultra-violet (UV) radiation
10.2.5	Lifting
10.2.6	Mechanical impact
10.2.7	Marking
10.2.101	Ability to withstand mechanical loads
10.3	Degree of protection of enclosures
10.4	Creepage distances
10.5	Protection against electric shock and integrity of protective circuits
10.9	Dielectric properties
10.10	Temperature-rise limits
10.11	Short-circuit withstand strength
5.101	Phase conductors characteristics / voltage drop

Table 24.1-3. IEC 60529 IP Ratings

IEC 529 IP Rating	Busway Type
IP2X	Pow-R-Way III plug-in busway; plug-in outlet protects against access to live parts
IP40	Pow-R-Way III indoor plug-in and feeder busway
IP54	Pow-R-Way III sprinkler-proof plug-in busway
IP55	Pow-R-Way III outdoor feeder busway
IP66	Pow-R-Way III severe outdoor feeder busway

Note: Outdoor feeder and sprinkler-proof plug-in busway joints require field-applied calk to meet above listed IP ratings.

Table 24.1-4. IEC 60529 Degrees of Protection

IEC 529 IP Rating	Description
IP40	Protection against access to hazardous parts with a wire or solid foreign object 1 mm diameter. No protection against water.
IP54	Protection against access to hazardous parts with a wire. Ingress of dust is not totally prevented, but dust shall not penetrate in a quantity to interfere with satisfactory operation of the apparatus or to impair safety. Protects against splashing water.
IP55	Protection against access to hazardous parts with a wire. Ingress of dust is not totally prevented, but dust shall not penetrate in a quantity to interfere with satisfactory operation of the apparatus or to impair safety. Protects against water jets.
IP66	Protection against access to hazardous parts with a wire and dust shall not penetrate in quantity to interfere with satisfactory operation or impair safety. Protects against powerful water jets.

Construction Details

See Figure 24.1-3

Bus bars are fabricated from high strength, 99% conductivity copper or 57% conductivity aluminum. The joint edge of each busway conductor bar is beveled while the Pow-R-Bridge conductor bars have full rounded edges. This makes for a smooth and easy connection between the busway and Pow-R-Bridge joint. The phase and neutral bars are insulated with Class B 130 °C epoxy insulation. The epoxy powder is applied by an automated fluidized bed process to ensure uniform thickness. The epoxy powder is applied over the full length of the preheated bar except for the joint and plug-in contact surfaces. After the powder has been fused to the bus bar, the bars enter an oven to cure. This process ensures that all of the epoxy powder cross links and hardens to the bus bar.

Fluidized bed applied epoxy provides resistance to water absorption and chemical erosion. Epoxy has outstanding heat transfer characteristics and is ideally suited for sandwich bus applications. The uniform thickness and smooth surface provided by epoxy ensures that the insulation will have no cavities or voids and also provides excellent edge coverage to the bars. Epoxy has excellent dielectric strength, is flame retardant and resists impacts that other Class B insulating material could not withstand.

Bus bars for plug-in applications have full-sized welded conductor tabs at the contact location points of the plug-in outlet. The tabs are of the same thickness as the conductor bars. The plug-in conductor tabs extend into the plug-in outlet, maintaining a true sandwich design throughout the entire busway length.

The result is improved heat dissipation, better bracing and elimination of the need to separate, or flare, the conductor bars at the plug-in opening. Maintaining a true sandwich design also eliminates potential pathways for the propagation of flame, smoke and gas through the busway housing, commonly referred to as the "chimney effect."

Silver-plating is applied to all joint and contact surfaces after the fluidized bed epoxy is applied. Aluminum bus bars are silver-plated by the Alstan® 88C process. Copper bus bars are plated with silver by a flashing process. The silver-plating of the conductor tabs provides an extremely durable contact surface for the spring loaded connections of bus plug stab assemblies.

Housing Details

See Figure 24.1-3

Pow-R-Way III is constructed with a rugged two-piece extruded aluminum housing. There are no seams or welds across the top or bottom sides of the housing. The housing is bolted along the bottom sides below the bus bars with high tensile strength zinc-plated hardware. No fastening bolts or screws penetrate the housing or enter the bus bar package.

Pow-R-Way III achieves the highest 6-cycle short-circuit withstand ratings available in the industry today. The non-magnetic, all-aluminum housing provides for excellent heat dissipation and a significant reduction in reactance and magnetic flux leakage as compared to a steel or steel and aluminum combination housing. The integrity and strength of the housing ensures specifiers and users of a safe and durable installation over a broad spectrum of industrial and commercial applications.

A protective finish of ANSI 61, epoxy powder paint is applied by an automated electrostatic process.

Integral Ground

The two-piece, extruded aluminum housing is designed, manufactured and UL listed as a 50% integral ground path (integral earth) and is fully fault rated. The system ground continuity is maintained through each joint by the ground path end blocks, ground path plates and joint covers. The aluminum joint covers are furnished with ground path contact surfaces on the inside of each end. When the covers are installed, the contact surfaces are bolted directly to the ground path end blocks with four 3/8-16 1/2-inch (12.7 mm) hex bolts per cover.

A highly visible label is furnished on each joint cover to alert the installer that the covers must be properly installed to maintain the ground path. The result is a 50% ground path that ensures ground continuity with very low resistance characteristics.

Internal Ground Option

Pow-R-Way III offers a 50% ground bus (copper or aluminum) that is internal to the busway.

Isolated Ground Option

To meet the growing demand for grounding isolation, Pow-R-Way III offers a 50% isolated ground bus that is insulated and internal to the busway. This option is available for application to operations with heavy microprocessor-based loads or large computer installations where grounding isolation is essential.

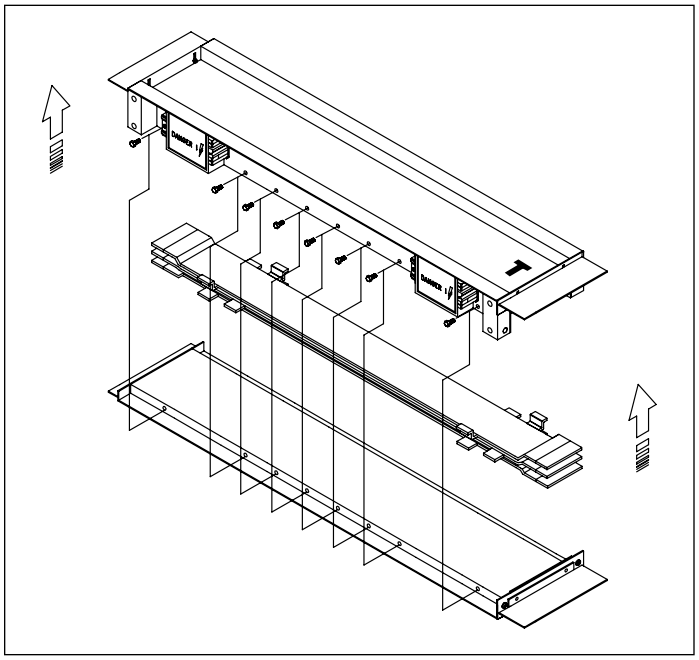

Figure 24.1-3. Housing Assembly

200% Neutral Option

See Figure 24.1-4

Pow-R-Way III offers a fully rated, 200% neutral bus option for busway fed distribution systems with nonlinear loads. The additional neutral capacity prevents the overheating caused by zero sequence harmonic currents. The Pow-R-Way III 200% neutral is manufactured with a single 0.50-inch (12.7 mm) thick bus bar, which receives the same silver-plating and Class B, 130°C Epoxy insulation as the phase bars.

Power System Harmonics are generated by various types of nonlinear loads. A sinusoidal voltage applied to a nonlinear load will result in a non-sinusoidal current and waveform distortion. Loads that are switched or pulsed, such as rectifiers, thyristors and switch-mode power supplies, are nonlinear. With the proliferation of electronics into industrial, commercial and institutional applications, nonlinear loads have become a significant and critical component of most modern distribution and control systems. Examples of nonlinear loads are personal computers, UPS systems, variable frequency motor controllers, electronic lighting ballasts, fax and copying machines, medical test equipment and many other microprocessor-based apparatus.

Nonlinear load currents typically are extremely high in harmonic content. The harmonics create numerous problems in electrical systems and equipment. Some harmonics are negative sequence with 120° phase displacement (this means the phase rotation is ACB instead of ABC). Positive sequence harmonics have 120° phase displacement, but are of the same rotation as the distribution system. Certain nonlinear loads cause odd triplen harmonics which are zero sequence with no phase displacement.

Balancing the phase load currents in a three-phase, four-wire system will normally reduce neutral currents to zero if load currents have an undistorted sinusoidal waveform. However, because zero sequence harmonics are additive and will not cancel each other in the neutral, the neutral current can be as high as 1.73 times the phase current, even with the phase currents perfectly balanced. This can result in overheated neutrals and lead to deterioration of equipment performance and a shortened equipment life cycle.

The Computer and Business Equipment Manufacturers Association (CBEMA) recommends that neutrals be oversized to at least 173% of the ampacity of the phase conductors to prevent problems. Pow-R-Way III offers a fully rated, 200% neutral bus option for busway fed distribution systems with non-sinusoidal loads. The additional neutral capacity prevents the overheating caused by high harmonic neutral currents.

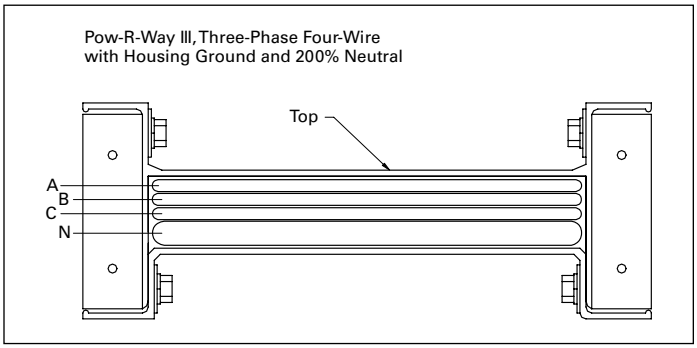

Figure 24.1-4. 200% Neutral Cross Section

UL Fire Stop System

Pow-R-Way III busway may be used in UL listed through-penetration fire stop systems. Systems applicable to busway (i.e., system number C-AJ-6002) are listed in the UL Fire Resistance Directory under "Through-Penetration Fire Stop Systems" and have met the ASTM E814 (UL 1479) criteria.

For typical installations shown in **Figure 24.1-5**, the installing contractor uses mineral wool batt and fire stop sealant. In riser applications, the system is used in combination with Pow-R-Way III vertical spring hangers and a floor flange. In horizontal applications, the system is used in combination with two wall flanges, one on each side of the wall, and sealant.

Note: This information is provided as a guideline for typical fire stop systems. Consult the fire stop system sealant manufacturer for the UL file number and specific product information.

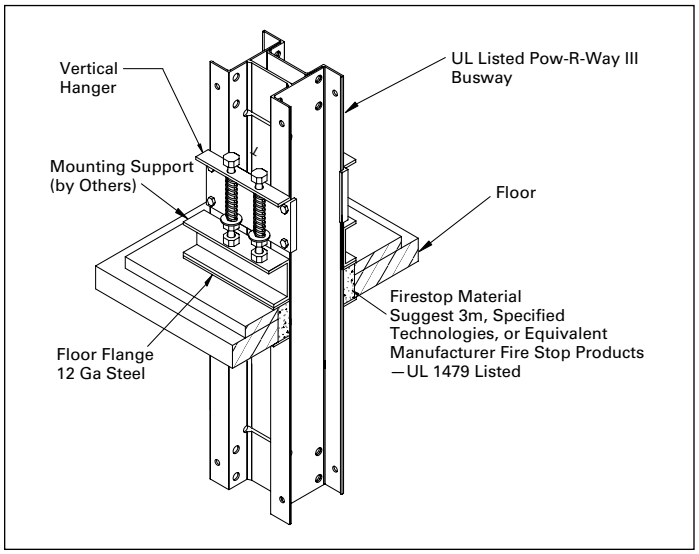

Figure 24.1-5. Typical Installations of Pow-R-Way III in Fire Stop Systems

Pow-R-Bridge

See Figure 24.1-6

Pow-R-Way III joint connections are made with the Pow-R-Bridge joint package, which is installed on each section of busway prior to shipment. A double-headed, torque-indicating bolt is provided to ensure that proper installation torque is achieved. Fall-away instruction tags are furnished on the torque-indicating bolt heads to allow for visual inspection from a distance. When the proper torque value is achieved, the top bolt head will shear off and allow the tag to fall to the floor. Any joint that is improperly torqued will retain the highly visible (caution yellow) tag at the bolt head.

The Pow-R-Bridge can provide an adjustment of ±0.50 inch (12.7 mm) at each joint. Over adjustment is prevented by the joint covers, which will only allow a 0.50-inch (12.7 mm) adjustment to be made and by stopping lances on the conductor bars of the Pow-R-Bridge. The non-rotating design of the Pow-R-Bridge maintains its configuration integrity when it has been removed from a section of busway. The conductors and insulators will not displace or swivel, making reinstallation of the Pow-R-Bridge quick and easy.

Outdoor Pow-R-Bridge

See Figure 24.1-7

Joint connections for outdoor feeder busway are made with a weatherized version of the Pow-R-Bridge joint. Aluminum water barriers, 1/16-inch (1.6 mm) thick, are provided across the "T" and "T opposite" sides of both joint ends on each section of outdoor busway. Closed cell, neoprene gaskets are applied to the top of each water barrier and to the inside of the aluminum side access covers. The aluminum side access covers overlap the top and bottom access covers and bolt directly onto the end blocks. The outdoor Pow-R-Bridge has the same ±0.50 inch (12.7 mm) adjustability and features as the indoor unit and is UL listed.

Table 24.1-5. Busway Pow-R-Bridge Joint Dimensions

Ampere Rating		Figure 24.1-8 Configurations	Width	Length
UL 857	IEC 439		Inches (mm)	Inches (mm)
Copper				
225	225	A	4.50 (114.3)	7.38 (187.5)
400	400	A	4.50 (114.3)	7.38 (187.5)
600	630	A	4.50 (114.3)	7.38 (187.5)
800	1000	A	4.50 (114.3)	7.38 (187.5)
1000	1200	A	5.12 (130.0)	7.38 (187.5)
1200	1400	A	5.62 (142.8)	7.38 (187.5)
1350	1550	A	6.12 (155.4)	7.38 (187.5)
1600	1800	A	7.12 (180.9)	7.38 (187.5)
2000	2250	A	8.38 (212.9)	7.38 (187.5)
2500	3000	B	10.88 (276.4)	7.38 (187.5)
3200	3800	C	15.88 (403.4)	7.38 (187.5)
4000	4500	C	18.38 (466.9)	7.38 (187.5)
5000	5800	D	23.41 (594.6)	7.38 (187.5)
Aluminum				
225	—	A	4.50 (114.3)	7.38 (187.5)
400	—	A	4.50 (114.3)	7.38 (187.5)
600	—	A	4.50 (114.3)	7.38 (187.5)
800	—	A	5.62 (142.8)	7.38 (187.5)
1000	—	A	6.12 (155.4)	7.38 (187.5)
1200	—	A	7.12 (180.9)	7.38 (187.5)
1350	—	A	8.38 (212.9)	7.38 (187.5)
1600	—	B	9.12 (231.6)	7.38 (187.5)
2000	—	B	10.88 (276.4)	7.38 (187.5)
2500	—	C	18.38 (466.9)	7.38 (187.5)
3200	—	D	19.88 (505.0)	7.38 (187.5)
4000	—	D	23.41 (594.6)	7.38 (187.5)

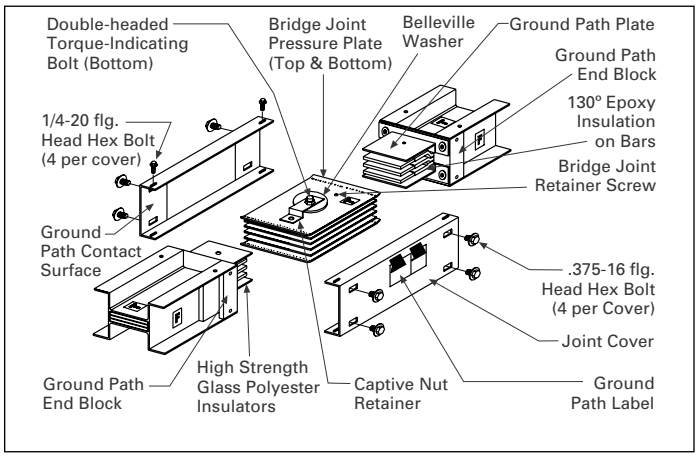

Figure 24.1-6. Indoor Bridge Joint Features

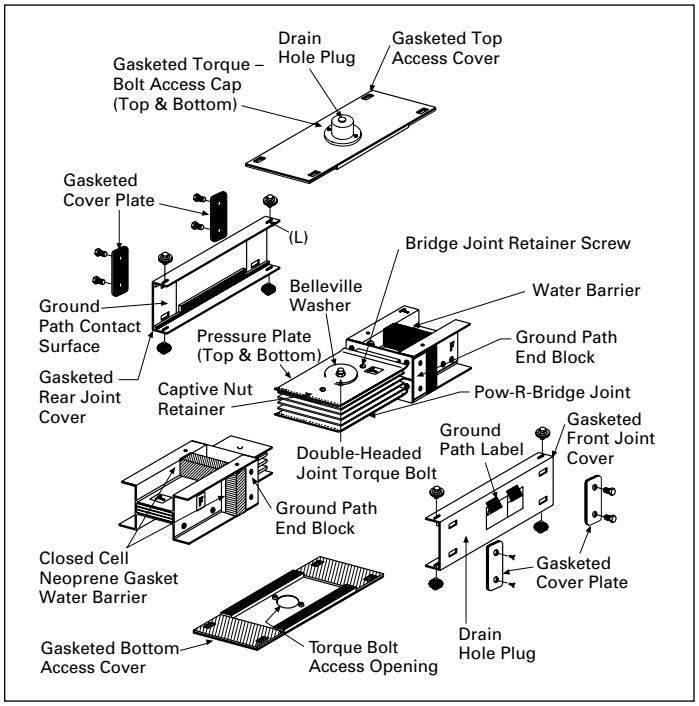

Figure 24.1-7. Outdoor Bridge Joint Features

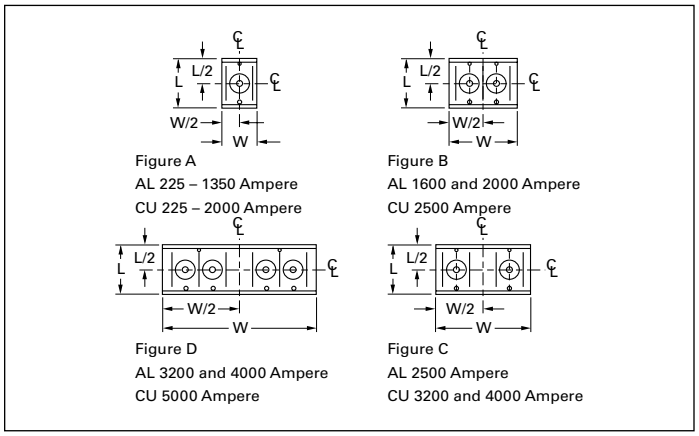

Figure 24.1-8. Pow-R-Bridge Joint

Pow-R-Way III Feeder Busway

See Figure 24.1-9 and Table 24.1-6

- 225–5000 A copper
- 225–4000 A aluminum

Straight sections of feeder busway can be supplied in any length, at 1/8-inch (3.2 mm) increments, from a 16.00-inch (406.4 mm) minimum to a 10-foot (3048 mm) maximum. **Figure 24.1-9** illustrates the configuration of feeder busway and Pow-R-Bridge for the available ampere ratings. See **Table 24.1-6** below for reference to the proper configuration.

Table 24.1-6. Feeder Busway Configuration

Ampere Rating			Figure 24.1-9 Configuration
UL 857		IEC 439	
Cu	Al	Cu	
225	225	225	A
400	400	400	A
600	600	630	A
800	800	1000	A
1000	1000	1200	A
1200	1200	1400	A
1350	1350	1550	A
1600	—	1800	A
2000	—	2250	A
—	1600	—	B
2500	2000	3000	B
3200	—	3800	C
4000	2500	4500	C
—	3200	—	D
5000	4000	5800	D

Each section will include one, factory installed, Pow-R-Bridge mounted to the left end of the busway (with the "T" to the top, when viewing the bus from the "F" side). Each Pow-R-Bridge will have a "T" label that must always match the "T" orientation of the busway.

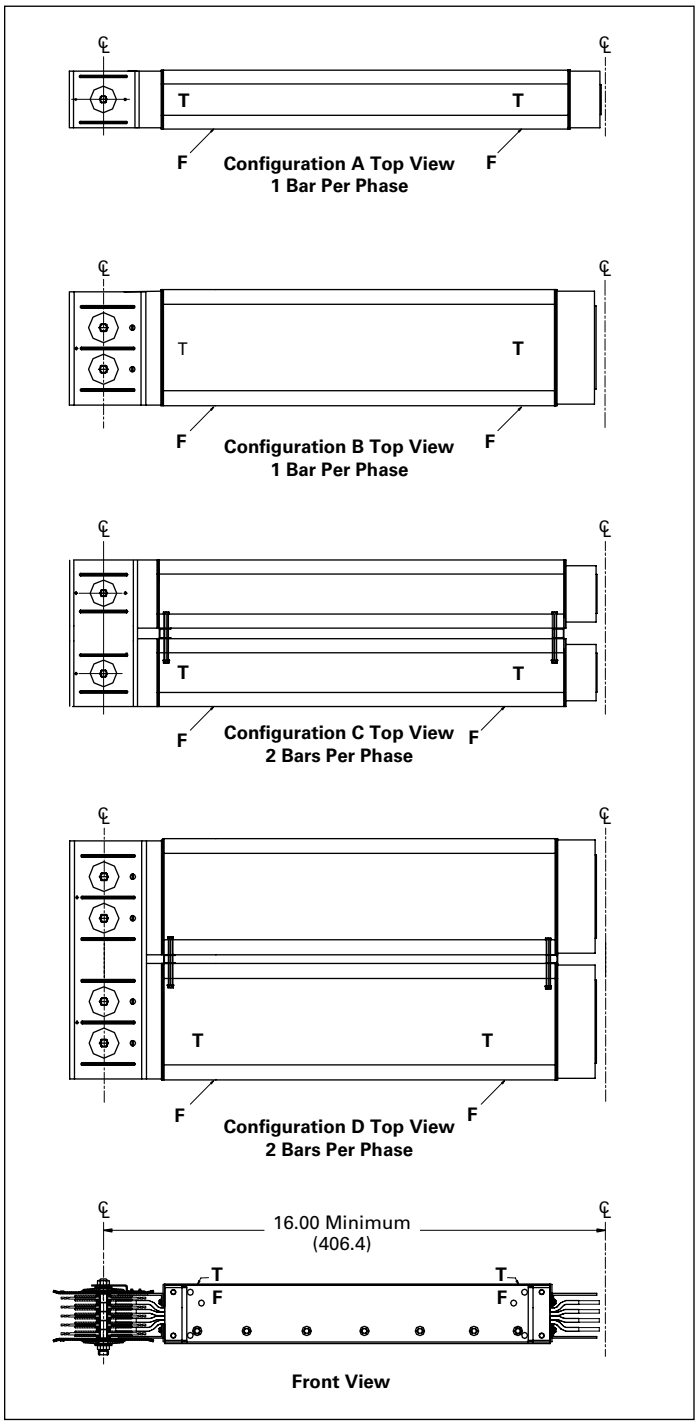

Figure 24.1-9. Feeder Busway

Pow-R-Way III Plug-in Busway

See Figure 24.1-10 and Table 24.1-7 and Table 24.1-8

- 225–5000 A copper
- 225–4000 A aluminum

Straight sections of plug-in busway are made only in 24.00-inch (609.6 mm) incremental lengths with a maximum length of 10 feet (3 m). **Figure 24.1-10** depicts the configuration of plug-in busway and Pow-R-Bridge for the available ampere ratings. See **Table 24.1-7** below for reference to the proper configuration.

Table 24.1-7. Configuration

Ampere Rating			Figure 24.1-10 Configuration
UL 857		IEC 439	
Cu	Al	Cu	
225	225	225	A
400	400	400	A
600	630	630	A
800	800	1000	A
1000	1000	1200	A
1200	1200	1400	A
1350	1350	1550	A
1600	—	1800	A
2000	—	2250	A
—	1600	—	B
2500	2000	3000	B
3200	—	3800	C
4000	2500	4500	C
—	3200	—	D
5000	4000	5800	D

Table 24.1-8 below illustrates the quantity of plug-in openings per side that are available per standard section.

Table 24.1-8. Number of Plug-In Openings

Duct Length		Number of Plug-In Openings	
Inches	mm	Front	Back
24.00	609.6	1	1
48.00	1219.2	2	2
72.00	1828.8	3	3
96.00	2438.4	4	4
120.00	3048.0	5	5

Each section will include one, factory installed, Pow-R-Bridge mounted to the left end of the busway (with the "T" label to the top, when viewing the bus from the "F" side). Each Pow-R-Bridge will have a "T" label that must always match the "T" orientation of the busway.

Plug-in Outlet

The plug-in outlet and cover are made from a durable, high strength, polycarbonate material that is rated as Class B, 130 °C, insulation. The plug-in cover is designed to protect the contact surfaces and prevent the entry of dirt, dust or moisture. The cover has a positive screw close feature that prohibits the opening of the cover without the use of a tool. The cover is also utility "leadlock" sealable.

As a countermeasure to the effects of thermal expansion and mechanical vibration, the plug-in outlet is secured to the busway housing with high tensile strength locking hardware.

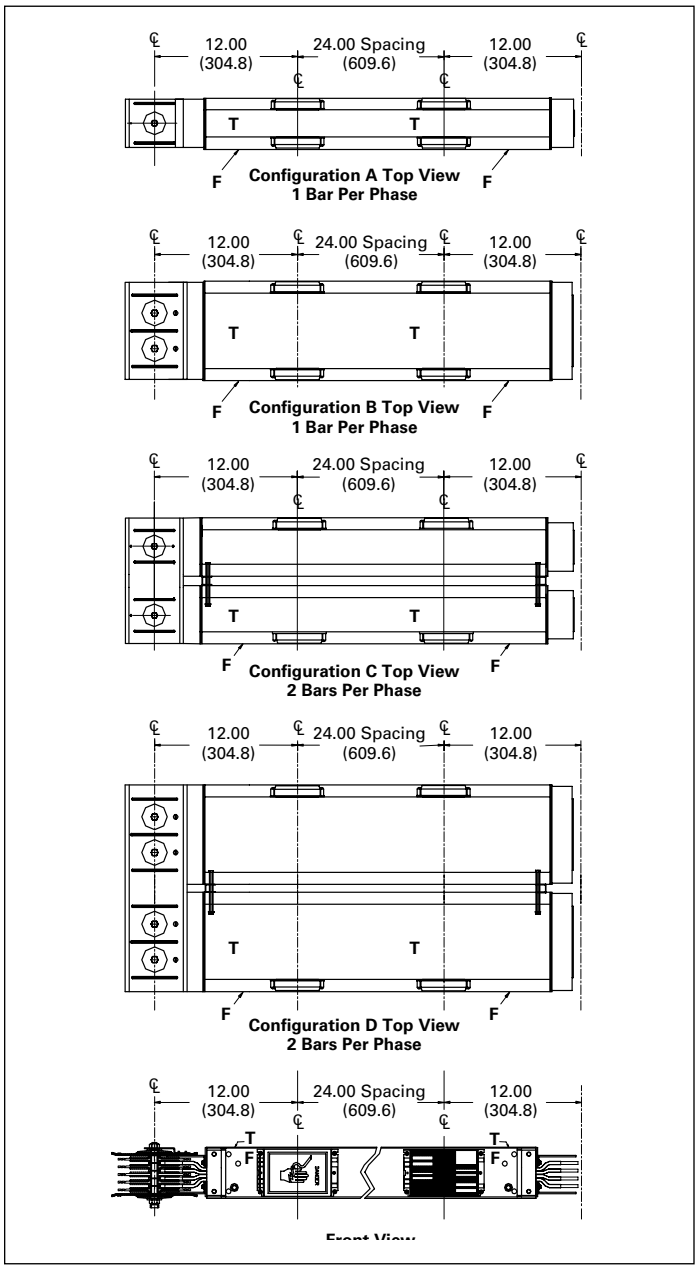

Figure 24.1-10. Plug-In Busway

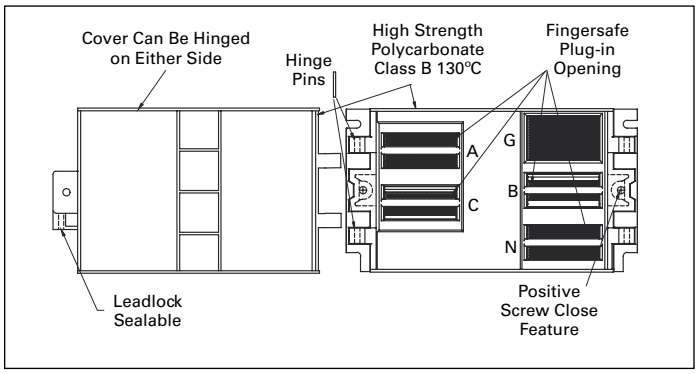

Figure 24.1-11. Plug-In Outlet Cover

Fittings

There is a fitting to meet every application need: flanges, elbows, offsets, tees, cable tap boxes, weatherheads, transformer connections, power take-off sections, reducers, adapter cubicles, expansion joints and end closures.

These fittings, along with standard and minimum dimensions, are described on the following pages.

When making field measurements and layouts, it should be remembered that the dimensions are given from the centerline of the Pow-R-Bridge.

The relationship of fittings to straight lengths (forward, rearward, upward and downward) is illustrated in **Figure 24.1-12**.

All straight lengths and fittings are marked with a "T" label and an "F" label. The "T" and "F" locations will also be noted on the construction, or the as-built, drawings furnished. **When installing the busway, the "T" and "F" markings of each section must match. Failure to do so will result in an improper installation with the phase bars out of sequence.**

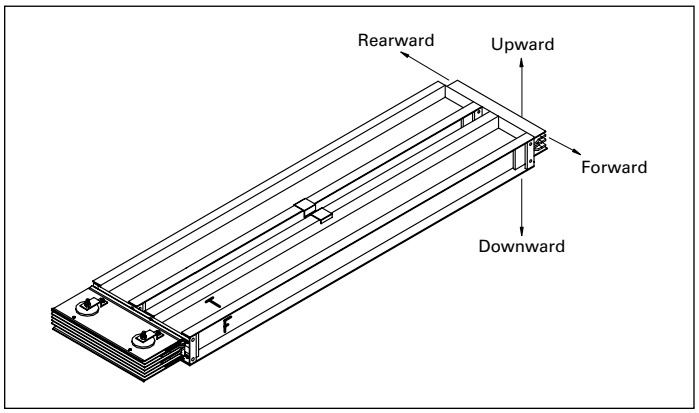

Figure 24.1-12. "T" and "F" Orientation for Fittings

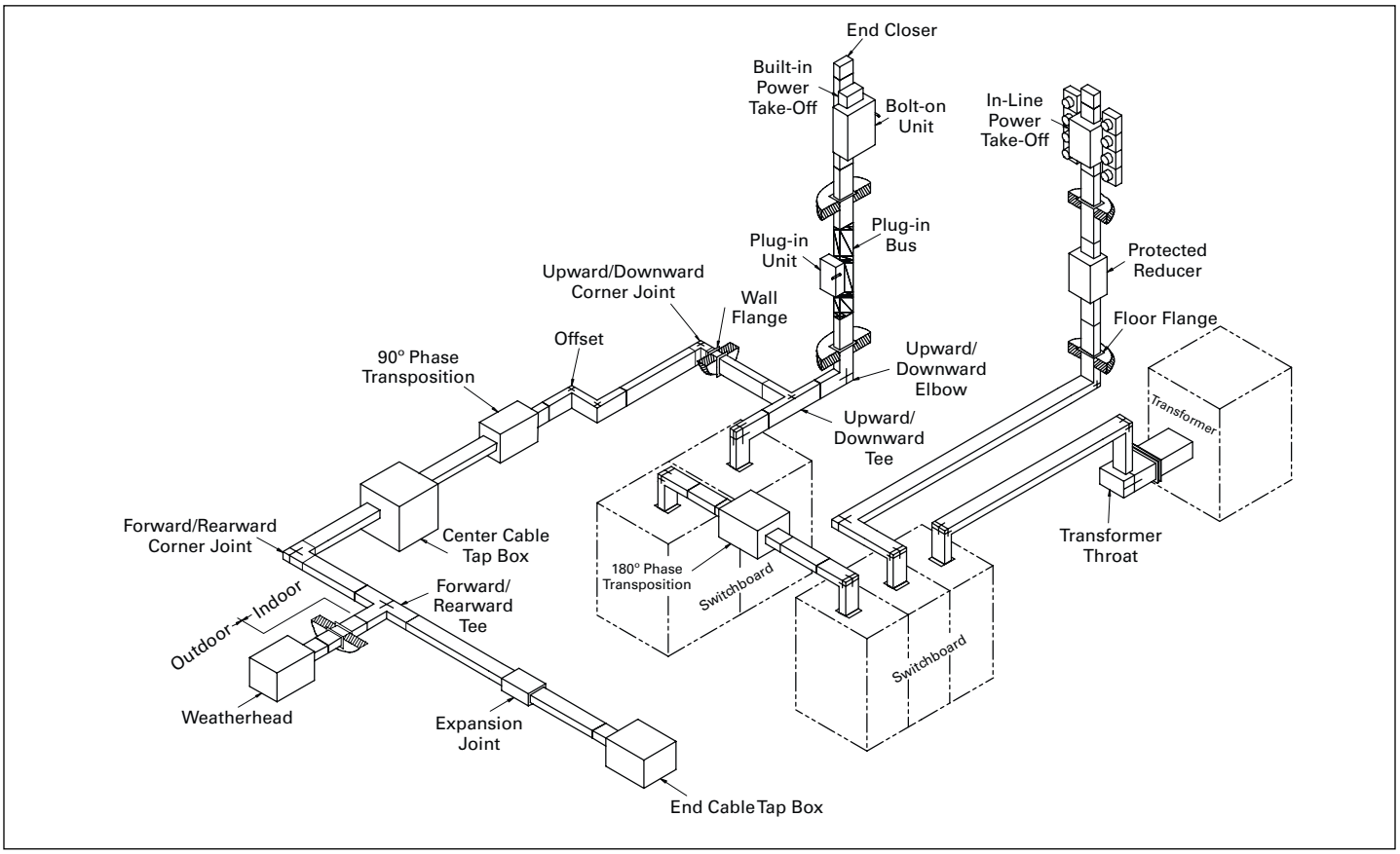

Figure 24.1-13. Typical Busway Components

Elbows

Traditional Indoor and Outdoor Elbows

See Figure 24.1-14

Elbows are used to make 90° changes in the direction of busway runs. The four types that are available are forward, rearward, upward and downward. See minimum leg lengths listed for each type in **Table 24.1-9** and **Table 24.1-10**.

All dimensions are to the centerline of the Pow-R-Bridge.

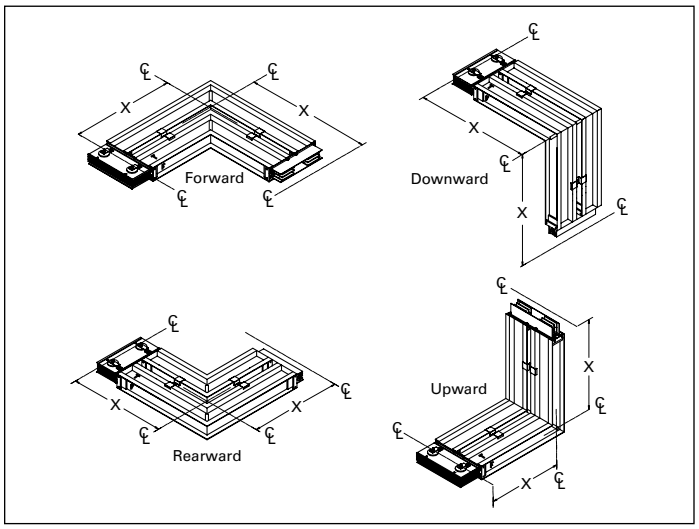

Figure 24.1-14. Traditional Elbows

Table 24.1-9. Forward and Rearward Elbows

UL 857				IEC 439		Minimum Leg Lengths (X) Dimensions in Inches (mm)
Cu		Al		Cu		
Ampere Rating	Weight (lb/ft) ①	Ampere Rating	Weight (lb/ft) ①	Ampere Rating	Weight (lb/ft) ①	
225	14.6	225	8.5	225	14.6	13.00 (330.2)
400	18.2	400	10.1	400	18.2	13.00 (330.2)
600	21.8	—	11.3	630	21.8	13.00 (330.2)
800	25.4	600	12.9	1000	25.4	13.00 (330.2)
1000	29.1	—	15.6	1200	29.1	13.00 (330.2)
1200	32.7	800	18.3	1400	32.7	13.50 (342.9)
1350	36.3	1000	20.9	1550	36.3	13.50 (342.9)
1600	40.0	1200	23.6	1800	40.0	14.00 (355.6)
2000	43.6	1350	26.3	2250	43.6	14.50 (368.3)
—	—	1600	—	—	—	15.00 (381.0)
2500	47.2	2000	29.0	3000	47.2	16.00 (406.4)
3200	50.9	—	31.7	3800	50.9	18.50 (469.9)
4000	54.5	2500	34.3	4500	54.5	19.50 (495.3)
—	—	3200	—	—	—	20.50 (520.7)
5000	79.0	4000	—	5800	79.0	22.50 (571.5)

① Interpolated weights reference maximum weight per ampacity; weight is based on minimum dimensions.

Table 24.1-10. Upward and Downward Elbows

UL 857				IEC 439		Minimum Leg Lengths (X) Dimensions in Inches (mm)	
Cu		Al		Cu		Upward	Downward
Ampere Rating	Weight (lb/ft) ②	Ampere Rating	Weight (lb/ft) ②	Ampere Rating	Weight (lb/ft) ②		
225	14.6	225	8.5	225	14.6	10.00 (254.0)	13.00 (330.2)
400	18.2	400	10.1	400	18.2	10.00 (254.0)	13.00 (330.2)
600	21.8	—	11.3	630	21.8	10.00 (254.0)	13.00 (330.2)
800	25.4	600	12.9	1000	25.4	10.00 (254.0)	13.00 (330.2)
1000	29.1	—	15.6	1200	29.1	10.00 (254.0)	13.00 (330.2)
1200	32.7	800	18.3	1400	32.7	10.00 (254.0)	13.00 (330.2)
1350	36.3	1000	20.9	1550	36.3	10.00 (254.0)	13.00 (330.2)
1600	40.0	1200	23.6	1800	40.0	10.00 (254.0)	13.00 (330.2)
2000	43.6	1550	26.3	2250	43.6	10.00 (254.0)	13.00 (330.2)
—	—	1600	—	—	—	10.00 (254.0)	13.00 (330.2)
2500	47.2	2000	29.0	3000	47.2	10.00 (254.0)	13.00 (330.2)
3200	50.9	—	31.7	3800	50.9	12.00 (304.8)	13.00 (330.2)
4000	54.5	2500	34.3	4500	54.5	12.00 (304.8)	13.00 (330.2)
—	—	3200	—	—	—	12.00 (304.8)	13.00 (330.2)
5000	79.0	4000	—	5800	79.0	12.00 (304.8)	13.00 (330.2)

② Interpolated weights reference maximum weight per ampacity; weight is based on minimum dimensions.

Corner Joint Elbows

See Figure 24.1-15

The Pow-R-Way III Corner Joint Elbow can be installed in areas where a traditional 90° turn could never have been accomplished before.

Pow-R-Way III Corner Joint Elbows can solve any serious pathway problem and contribute to successful layouts with minimal space requirements.

All dimensions are to the centerline of the Corner Joint Connection.

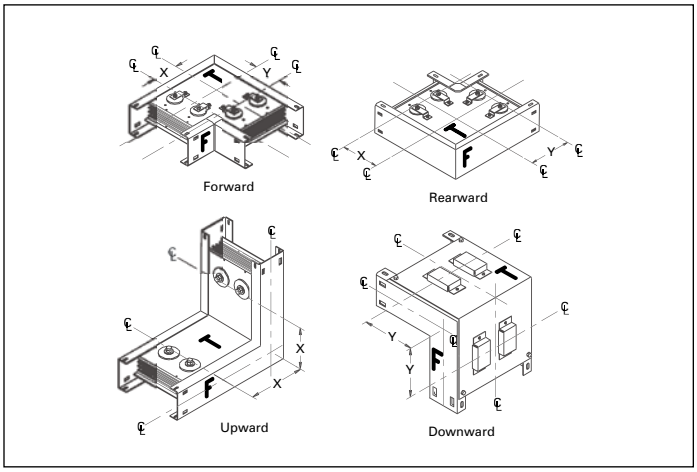

Figure 24.1-15. Corner Joint Elbows (For Indoor Applications Only)

Table 24.1-11. Forward/Rearward Corner Joints

Ampere Rating			Dimensions Inches (mm)	
UL 857		IEC 439		
Cu	Al	Cu	(X)	(Y)
225	225	225	0.94 (23.9)	5.38 (136.7)
400	400	400	0.94 (23.9)	5.38 (136.7)
600	—	630	0.94 (23.9)	5.38 (136.7)
800	600	1000	0.94 (23.9)	5.38 (136.7)
1000	—	1200	1.25 (31.8)	5.69 (144.5)
1200	800	1400	1.50 (38.1)	5.94 (150.9)
1350	1000	1550	1.75 (44.5)	6.19 (157.2)
1600	1200	1800	2.25 (57.2)	6.69 (169.9)
2000	1350	2250	2.88 (73.2)	7.31 (185.7)
—	1600	—	3.25 (82.6)	7.70 (195.6)
2500	2000	3000	4.12 (104.7)	8.57 (217.7)
3200	—	3800	6.64 (168.7)	11.07 (281.2)
4000	2500	4500	7.89 (200.4)	12.32 (312.9)
—	3200	—	8.65 (219.7)	13.08 (332.2)
5000	4000	5800	10.42 (264.7)	14.85 (377.2)

Table 24.1-12. Upward/Downward Corner Joints

Ampere Rating			Dimensions in Inches (mm)					
UL 857		IEC 439	Housing Ground		Internal Ground		Isolated Ground	
Cu	Al	Cu	(X)	(Y)	(X)	(Y)	(X)	(Y)
Three-Wire								
225	225	225	4.70 (119.6)	4.35 (110.5)	4.77 (121.2)	4.41 (112.0)	5.27 (133.9)	4.43 (112.5)
400	400	400	4.70 (119.6)	4.35 (110.5)	4.77 (121.2)	4.41 (112.0)	5.27 (133.9)	4.43 (112.5)
600	—	630	4.70 (119.6)	4.35 (110.5)	4.77 (121.2)	4.41 (112.0)	5.27 (133.9)	4.43 (112.5)
800	600	1000	4.70 (119.6)	4.35 (110.5)	4.77 (121.2)	4.41 (112.0)	5.27 (133.9)	4.43 (112.5)
1000	—	1200	4.70 (119.6)	4.35 (110.5)	4.77 (121.2)	4.41 (112.0)	5.27 (133.9)	4.43 (112.5)
1200	800	1400	4.70 (119.6)	4.35 (110.5)	4.77 (121.2)	4.41 (112.0)	5.27 (133.9)	4.43 (112.5)
1350	1000	1550	4.70 (119.6)	4.35 (110.5)	4.77 (121.2)	4.41 (112.0)	5.27 (133.9)	4.43 (112.5)
1600	1200	1800	4.70 (119.6)	4.35 (110.5)	4.77 (121.2)	4.41 (112.0)	5.27 (133.9)	4.43 (112.5)
2000	1350	2250	4.70 (119.6)	4.35 (110.5)	4.77 (121.2)	4.41 (112.0)	5.27 (133.9)	4.43 (112.5)
—	1600	—	4.70 (119.6)	4.35 (110.5)	4.77 (121.2)	4.41 (112.0)	5.27 (133.9)	4.43 (112.5)
2500	2000	3000	4.70 (119.6)	4.35 (110.5)	4.77 (121.2)	4.41 (112.0)	5.27 (133.9)	4.43 (112.5)
3200	—	3800	4.70 (119.6)	4.35 (110.5)	4.77 (121.2)	4.41 (112.0)	5.27 (133.9)	4.43 (112.5)
4000	2500	4500	4.70 (119.6)	4.35 (110.5)	4.77 (121.2)	4.41 (112.0)	5.27 (133.9)	4.43 (112.5)
—	3200	—	4.70 (119.6)	4.35 (110.5)	4.77 (121.2)	4.41 (112.0)	5.27 (133.9)	4.43 (112.5)
5000	4000	5800	4.70 (119.6)	4.35 (110.5)	4.77 (121.2)	4.41 (112.0)	5.27 (133.9)	4.43 (112.5)
Four-Wire (100%)								
225	225	225	4.71 (119.6)	5.00 (127.0)	4.77 (121.2)	5.07 (128.8)	5.28 (134.1)	5.09 (129.3)
400	400	400	4.71 (119.6)	5.00 (127.0)	4.77 (121.2)	5.07 (128.8)	5.28 (134.1)	5.09 (129.3)
600	—	630	4.71 (119.6)	5.00 (127.0)	4.77 (121.2)	5.07 (128.8)	5.28 (134.1)	5.09 (129.3)
800	600	1000	4.71 (119.6)	5.00 (127.0)	4.77 (121.2)	5.07 (128.8)	5.28 (134.1)	5.09 (129.3)
1000	—	1200	4.71 (119.6)	5.00 (127.0)	4.77 (121.2)	5.07 (128.8)	5.28 (134.1)	5.09 (129.3)
1200	800	1400	4.71 (119.6)	5.00 (127.0)	4.77 (121.2)	5.07 (128.8)	5.28 (134.1)	5.09 (129.3)
1350	1000	1550	4.71 (119.6)	5.00 (127.0)	4.77 (121.2)	5.07 (128.8)	5.28 (134.1)	5.09 (129.3)
1600	1200	1800	4.71 (119.6)	5.00 (127.0)	4.77 (121.2)	5.07 (128.8)	5.28 (134.1)	5.09 (129.3)
2000	1350	2250	4.71 (119.6)	5.00 (127.0)	4.77 (121.2)	5.07 (128.8)	5.28 (134.1)	5.09 (129.3)
—	1600	—	4.71 (119.6)	5.00 (127.0)	4.77 (121.2)	5.07 (128.8)	5.28 (134.1)	5.09 (129.3)
2500	2000	3000	4.71 (119.6)	5.00 (127.0)	4.77 (121.2)	5.07 (128.8)	5.28 (134.1)	5.09 (129.3)
3200	—	3800	4.71 (119.6)	5.00 (127.0)	4.77 (121.2)	5.07 (128.8)	5.28 (134.1)	5.09 (129.3)
4000	2500	4500	4.71 (119.6)	5.00 (127.0)	4.77 (121.2)	5.07 (128.8)	5.28 (134.1)	5.09 (129.3)
—	3200	—	4.71 (119.6)	5.00 (127.0)	4.77 (121.2)	5.07 (128.8)	5.28 (134.1)	5.09 (129.3)
5000	4000	5800	4.71 (119.6)	5.00 (127.0)	4.77 (121.2)	5.07 (128.8)	5.28 (134.1)	5.09 (129.3)
Four-Wire (200%)								
225	225	225	4.98 (126.5)	5.10 (129.5)	5.04 (128.0)	5.17 (131.3)	5.55 (141.0)	5.19 (131.8)
400	400	400	4.98 (126.5)	5.10 (129.5)	5.04 (128.0)	5.17 (131.3)	5.55 (141.0)	5.19 (131.8)
600	—	630	4.98 (126.5)	5.10 (129.5)	5.04 (128.0)	5.17 (131.3)	5.55 (141.0)	5.19 (131.8)
800	600	1000	4.98 (126.5)	5.10 (129.5)	5.04 (128.0)	5.17 (131.3)	5.55 (141.0)	5.19 (131.8)
1000	—	1200	4.98 (126.5)	5.10 (129.5)	5.04 (128.0)	5.17 (131.3)	5.55 (141.0)	5.19 (131.8)
1200	800	1400	4.98 (126.5)	5.10 (129.5)	5.04 (128.0)	5.17 (131.3)	5.55 (141.0)	5.19 (131.8)
1350	1000	1550	4.98 (126.5)	5.10 (129.5)	5.04 (128.0)	5.17 (131.3)	5.55 (141.0)	5.19 (131.8)
1600	1200	1800	4.98 (126.5)	5.10 (129.5)	5.04 (128.0)	5.17 (131.3)	5.55 (141.0)	5.19 (131.8)
2000	1350	2250	4.98 (126.5)	5.10 (129.5)	5.04 (128.0)	5.17 (131.3)	5.55 (141.0)	5.19 (131.8)
—	1600	—	4.98 (126.5)	5.10 (129.5)	5.04 (128.0)	5.17 (131.3)	5.55 (141.0)	5.19 (131.8)
2500	2000	3000	4.98 (126.5)	5.10 (129.5)	5.04 (128.0)	5.17 (131.3)	5.55 (141.0)	5.19 (131.8)
3200	—	3800	4.98 (126.5)	5.10 (129.5)	5.04 (128.0)	5.17 (131.3)	5.55 (141.0)	5.19 (131.8)
4000	2500	4500	4.98 (126.5)	5.10 (129.5)	5.04 (128.0)	5.17 (131.3)	5.55 (141.0)	5.19 (131.8)
—	3200	—	4.98 (126.5)	5.10 (129.5)	5.04 (128.0)	5.17 (131.3)	5.55 (141.0)	5.19 (131.8)
5000	4000	5800	4.98 (126.5)	5.10 (129.5)	5.04 (128.0)	5.17 (131.3)	5.55 (141.0)	5.19 (131.8)

Special Angle Elbows

Special angle elbows are traditional elbows that allow the direction of the busway runs to change at angles greater than 90 degrees. They allow easy routing through non-traditional corridors. The four types offered are forward, rearward, upward and downward. See minimum leg lengths for each type listed in **Table 24.1-13** and **Table 24.1-14**.

Table 24.1-13. Forward and Rearward Elbows

Ampere Rating			Minimum Leg Lengths (X) Dimensions in Inches (mm)
UL 857		IEC 439	
Cu	Al	Cu	
225	225	225	13.00 (330.2)
400	400	400	13.00 (330.2)
600	—	630	13.00 (330.2)
800	600	1000	13.00 (330.2)
1000	—	1200	13.00 (330.2)
1200	800	1400	13.50 (342.9)
1350	1000	1550	13.50 (342.9)
1600	1200	1800	14.00 (355.6)
2000	1350	2250	14.50 (368.3)
—	1600	—	15.00 (381.0)
2500	2000	3000	16.00 (406.4)
3200	—	3800	18.50 (469.9)
4000	2500	4500	19.50 (495.3)
—	3200	—	20.50 (520.7)
5000	4000	5800	22.50 (571.5)

Table 24.1-14. Upward and Downward Elbows

Ampere Rating			Minimum Leg Lengths (X) Dimensions in Inches (mm)	
UL 857		IEC 439		
Cu	Al	Cu	Upward	Downward
225	225	225	10.00 (254.0)	13.00 (330.2)
400	400	400	10.00 (254.0)	13.00 (330.2)
600	—	630	10.00 (254.0)	13.00 (330.2)
800	600	1000	10.00 (254.0)	13.00 (330.2)
1000	—	1200	10.00 (254.0)	13.00 (330.2)
1200	800	1400	10.00 (254.0)	13.00 (330.2)
1350	1000	1550	10.00 (254.0)	13.00 (330.2)
1600	1200	1800	10.00 (254.0)	13.00 (330.2)
2000	1350	2250	10.00 (254.0)	13.00 (330.2)
—	1600	—	10.00 (254.0)	13.00 (330.2)
2500	2000	3000	10.00 (254.0)	13.00 (330.2)
3200	—	3800	12.00 (304.8)	13.00 (330.2)
4000	2500	4500	12.00 (304.8)	13.00 (330.2)
—	3200	—	12.00 (304.8)	13.00 (330.2)
5000	4000	5800	12.00 (304.8)	13.00 (330.2)

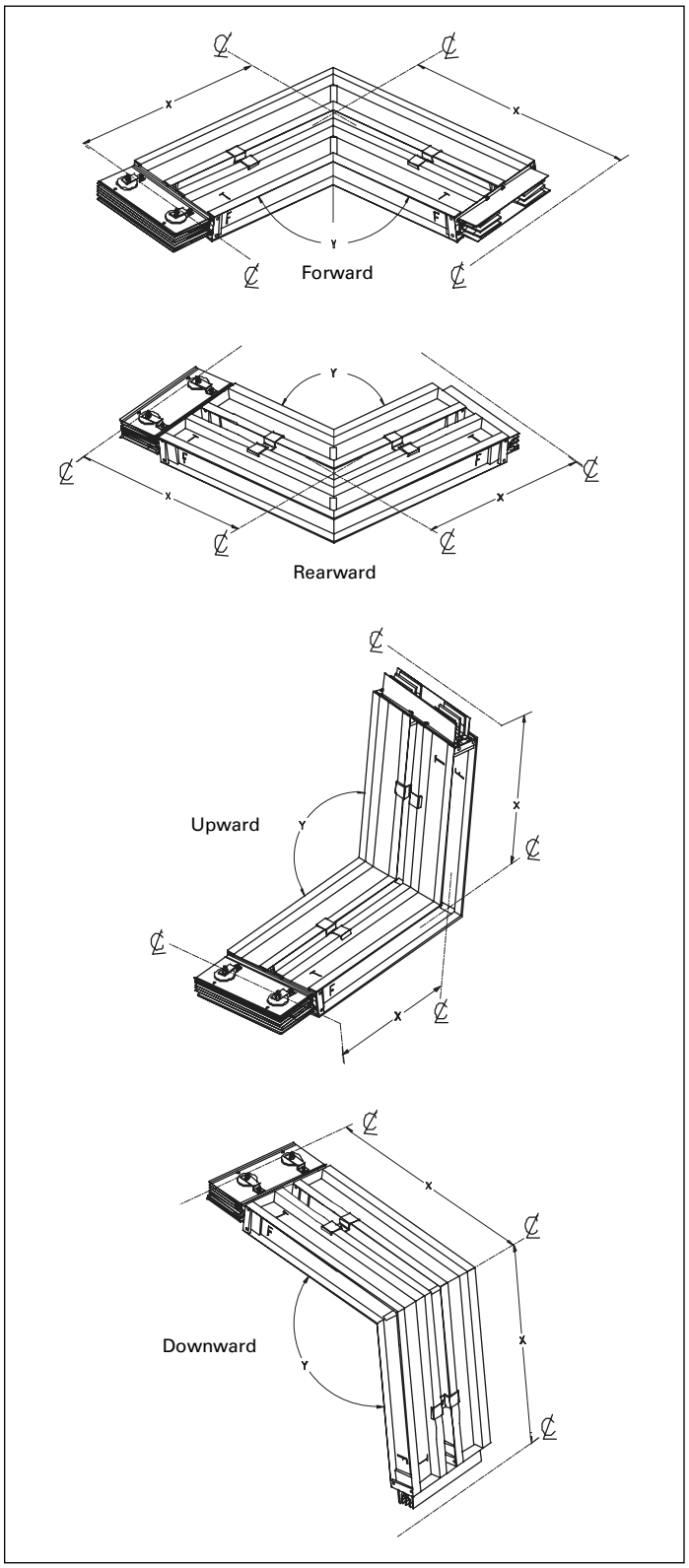

Figure 24.1-16. Special Angle Elbows

Flanges

Standard and Flush Flanges

See Table 24.1-17

Flanges provide a direct connection to low voltage switchgear, switchboards, motor control centers and other apparatus. Cutout dimensions and drilling plans are provided with the customer drawings and it is the responsibility of the switchgear manufacturer to provide the opening, flange drillings, connecting hardware and bus risers in their equipment. For proper coordination between busway and other equipment, detailed drawings, including switchgear orientation, must accompany the order. A standard flange can be supplied to the left or right of a section, as required. A flush flange is used when the busway must lay close to the top of a switchboard. The edge of the busway is 1.25 inches (31.8 mm) from the top of the switchboard.

All dimensions are to the centerline of the Pow-R-Bridge.

Table 24.1-15. Switchboard Flanges

Ampere Rating			Flush Flange Min. Leg Length	Standard Flange Min. Leg Length
UL 857		IEC 439		
Cu	Al	Cu	(X) Inches (mm)	(X) Inches (mm)
225	225	225	15.00 (381.0)	12.00 (304.8)
400	400	400	15.00 (381.0)	12.00 (304.8)
600	600	630	15.00 (381.0)	12.00 (304.8)
800	800	1000	15.00 (381.0)	12.00 (304.8)
1000	1000	1200	15.00 (381.0)	12.00 (304.8)
1200	1200	1400	15.00 (381.0)	12.00 (304.8)
1350	1350	1550	15.00 (381.0)	12.00 (304.8)
1600	1600	1800	15.00 (381.0)	12.00 (304.8)
2000	2000	2250	15.00 (381.0)	12.00 (304.8)
2500	2500	3000	15.00 (381.0)	12.00 (304.8)
3200	3200	3800	15.00 (381.0)	12.00 (304.8)
4000	4000	4500	15.00 (381.0)	12.00 (304.8)
5000	—	5800	15.00 (381.0)	12.00 (304.8)

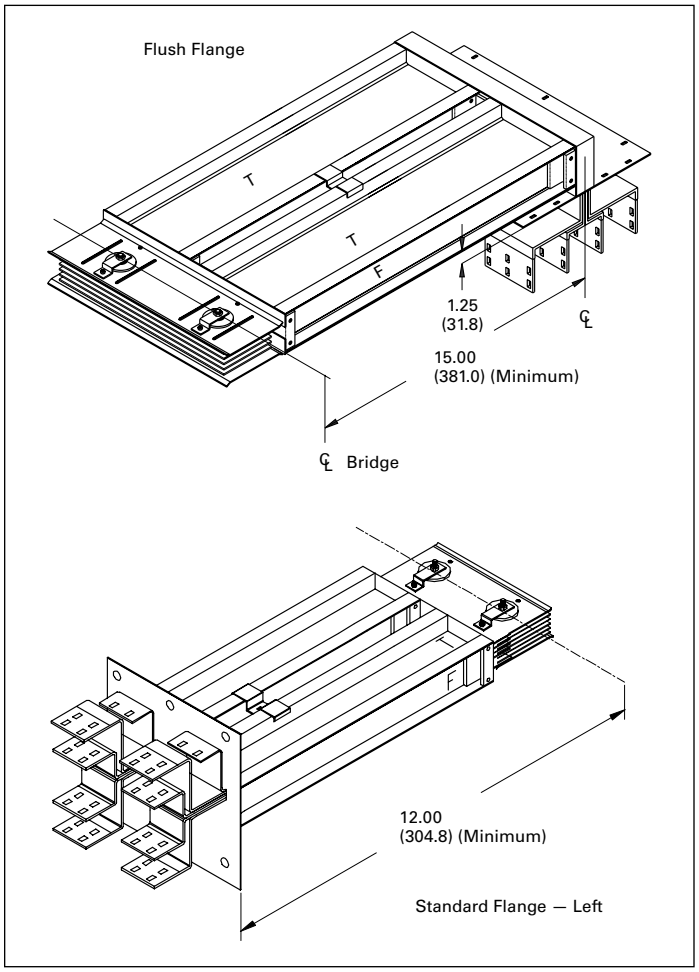

Figure 24.1-17. Flanges

Vault Flanges

Vault flanges are used to enter a utility vault for termination to the utility transformer. Each vault flange is custom designed to meet each specific utility specification. Vault flanges may look similar to those shown in **Figure 24.1-18**. Please consult the factory for specific dimensions based upon utility specifications.

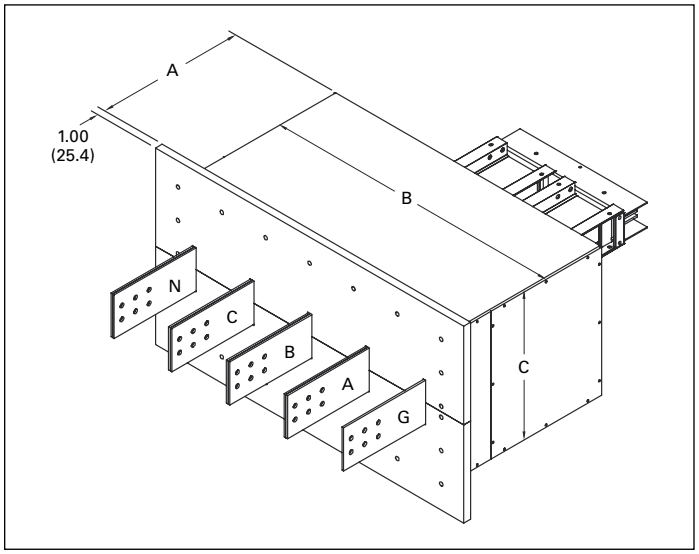

Figure 24.1-18. Vault Flanges

Elbow Flanges

See Table 24.1-19

An Elbow Flange is a combination of a standard elbow and a standard flange fabricated into a single fitting. Elbow Flanges are typically used when the minimum leg lengths for either the standard elbow or standard flange cannot be maintained. Minimum leg lengths are listed in **Table 24.1-16** and **Table 24.1-17**.

All dimensions are to the centerline of the Pow-R-Bridge.

Table 24.1-16. Forward and Rearward Elbow Flanges

Ampere Rating			Minimum Leg Lengths Dimensions in Inches (mm)	
UL 857		IEC 439		
Cu	Al	Cu	Joint Leg, (X)	Joint Leg, (Y)
225	225	225	13.00 (330.2)	8.75 (222.3)
400	400	400	13.00 (330.2)	8.75 (222.3)
600	—	630	13.00 (330.2)	8.75 (222.3)
800	600	1000	13.00 (330.2)	8.75 (222.3)
1000	—	1200	13.00 (330.2)	8.75 (222.3)
1200	800	1400	13.50 (342.9)	9.25 (235.0)
1350	1000	1550	13.50 (342.9)	9.25 (235.0)
1600	1200	1800	14.00 (355.6)	9.75 (247.7)
2000	1350	2250	14.50 (368.3)	10.25 (260.4)
—	1600	—	15.00 (381.0)	10.75 (273.1)
2500	2000	3000	16.00 (406.4)	11.75 (298.5)
3200	—	3800	18.50 (469.9)	14.00 (355.6)
4000	2500	4500	19.50 (495.3)	15.25 (387.4)
—	3200	—	20.50 (520.7)	16.00 (406.4)
5000	4000	5800	22.50 (571.5)	17.75 (450.9)

Table 24.1-17. Upward and Downward Elbow Flanges

Ampere Rating			Minimum Leg Lengths Dimensions in Inches (mm)			
UL 857		IEC 439	Joint Leg, (X)		Flange Leg, (Y)	
Cu	Al	Cu	Up	Down	Up	Down
225	225	225	10.00 (254.0)	13.00 (330.2)	5.75 (146.1)	8.75 (222.3)
400	400	400	10.00 (254.0)	13.00 (330.2)	5.75 (146.1)	8.75 (222.3)
600	—	630	10.00 (254.0)	13.00 (330.2)	5.75 (146.1)	8.75 (222.3)
800	600	1000	10.00 (254.0)	13.00 (330.2)	5.75 (146.1)	8.75 (222.3)
1000	—	1200	10.00 (254.0)	13.00 (330.2)	5.75 (146.1)	8.75 (222.3)
1200	800	1400	10.00 (254.0)	13.00 (330.2)	5.75 (146.1)	8.75 (222.3)
1350	1000	1550	10.00 (254.0)	13.00 (330.2)	5.75 (146.1)	8.75 (222.3)
1600	1200	1800	10.00 (254.0)	13.00 (330.2)	5.75 (146.1)	8.75 (222.3)
2000	1350	2250	10.00 (254.0)	13.00 (330.2)	5.75 (146.1)	8.75 (222.3)
—	1600	—	10.00 (254.0)	13.00 (330.2)	5.75 (146.1)	8.75 (222.3)
2500	2000	3000	10.00 (254.0)	13.00 (330.2)	5.75 (146.1)	8.75 (222.3)
3200	—	3800	12.00 (304.8)	13.00 (330.2)	7.75 (196.9)	8.75 (222.3)
4000	2500	4500	12.00 (304.8)	13.00 (330.2)	7.75 (196.9)	8.75 (222.3)
—	3200	—	12.00 (304.8)	13.00 (330.2)	7.75 (196.9)	8.75 (222.3)
5000	4000	5800	12.00 (304.8)	13.00 (330.2)	7.75 (196.9)	8.75 (222.3)

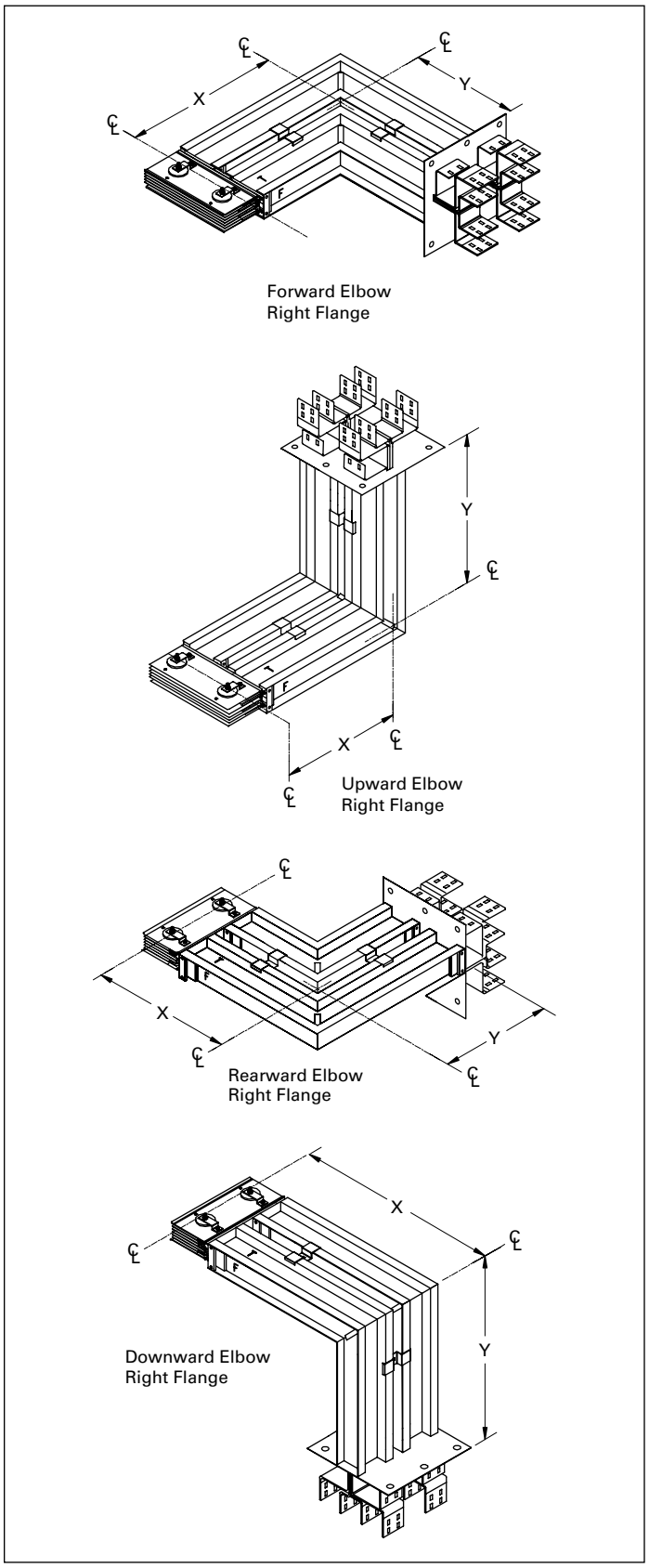

Figure 24.1-19. Elbow Flanges

Offsets

See Figure 24.1-20

An Offset is used to avoid obstacles and to conform to the building's structure. It is two elbows fabricated into a single fitting for use where space restrictions prohibit the use of two standard 90° elbows. The minimum leg lengths are listed in **Table 24.1-18** and **Table 24.1-19**.

All dimensions are to the centerline of the Pow-R-Bridge.

Table 24.1-18. Forward and Rearward Offsets

Ampere Rating			Minimum Leg Lengths Dimensions (Y) in Inches (mm)
UL 857		IEC 439	
Cu	Al	Cu	
225	225	225	13.00 (330.2)
400	400	400	13.00 (330.2)
600	—	630	13.00 (330.2)
800	600	1000	13.00 (330.2)
1000	—	1200	13.00 (330.2)
1200	800	1400	13.50 (342.9)
1350	1000	1550	13.50 (342.9)
1600	1200	1800	14.00 (355.6)
2000	1350	2250	14.50 (368.3)
—	1600	—	15.00 (381.0)
2500	2000	3000	16.00 (406.4)
3200	—	3800	18.50 (469.9)
4000	2500	4500	19.50 (495.3)
—	3200	—	20.50 (520.7)
5000	4000	5800	22.50 (571.5)

Table 24.1-19. Upward and Downward Offsets

Ampere Rating			Minimum Leg Lengths Dimensions in Inches (mm)			
UL 857		IEC 439	Upward		Downward	
Cu	Al	Cu	(Y)	(Z)	(Y)	(Z)
225	225	225	10.00 (254.0)	13.00 (330.2)	13.00 (330.2)	10.00 (254.0)
400	400	400	10.00 (254.0)	13.00 (330.2)	13.00 (330.2)	10.00 (254.0)
600	—	630	10.00 (254.0)	13.00 (330.2)	13.00 (330.2)	10.00 (254.0)
800	600	1000	10.00 (254.0)	13.00 (330.2)	13.00 (330.2)	10.00 (254.0)
1000	—	1200	10.00 (254.0)	13.00 (330.2)	13.00 (330.2)	10.00 (254.0)
1200	800	1400	10.00 (254.0)	13.00 (330.2)	13.00 (330.2)	10.00 (254.0)
1350	1000	1550	10.00 (254.0)	13.00 (330.2)	13.00 (330.2)	10.00 (254.0)
1600	1200	1800	10.00 (254.0)	13.00 (330.2)	13.00 (330.2)	10.00 (254.0)
2000	1350	2250	10.00 (254.0)	13.00 (330.2)	13.00 (330.2)	10.00 (254.0)
—	1600	—	10.00 (254.0)	13.00 (330.2)	13.00 (330.2)	10.00 (254.0)
2500	2000	3000	10.00 (254.0)	13.00 (330.2)	13.00 (330.2)	10.00 (254.0)
3200	—	3800	12.00 (304.8)	13.00 (330.2)	13.00 (330.2)	12.00 (304.8)
4000	2500	4500	12.00 (304.8)	13.00 (330.2)	13.00 (330.2)	12.00 (304.8)
—	3200	—	12.00 (304.8)	13.00 (330.2)	13.00 (330.2)	12.00 (304.8)
5000	4000	5800	12.00 (304.8)	13.00 (330.2)	13.00 (330.2)	12.00 (304.8)

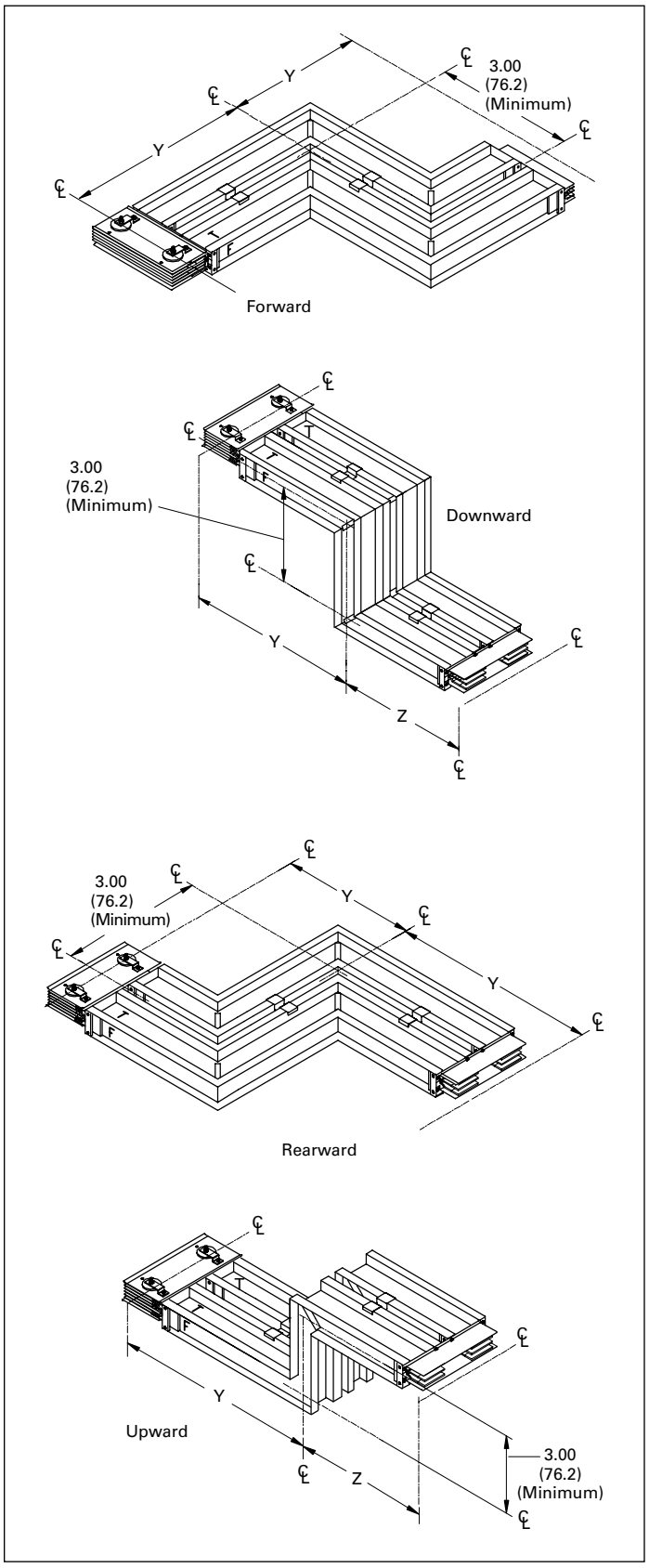

Figure 24.1-20. Offsets

Combination Offsets

Combination offsets are used to conform to the building's structure and change direction, utilizing a small amount of space. They are two different oriented elbows fabricated into a single fitting. Forward or rearward directions are determined by the "T" and "F" locations. Please refer to **Page 24.1-9**. Minimum leg lengths are listed in **Table 24.1-9** and **Table 24.1-10**.

Table 24.1-20. Combination Offsets

Ampere Rating			Dimensions in Inches (mm)			
UL 857		IEC 439	X	Y	Three-Wire/ Four-Wire	Four-Wire 200% N
Cu	Al	Cu			Z	Z
Upward/Forward/Rearward						
225	225	225	10.00 (254.0)	13.00 (330.2)	7.00 (177.8)	7.00 (177.8)
400	400	400	10.00 (254.0)	13.00 (330.2)	7.00 (177.8)	7.00 (177.8)
600	—	630	10.00 (254.0)	13.00 (330.2)	7.00 (177.8)	7.00 (177.8)
800	600	1000	10.00 (254.0)	13.00 (330.2)	7.00 (177.8)	7.00 (177.8)
1000	—	1200	10.00 (254.0)	13.00 (330.2)	7.00 (177.8)	7.50 (190.5)
1200	800	1400	10.00 (254.0)	13.50 (342.9)	7.50 (190.5)	7.50 (190.5)
1350	1000	1550	10.00 (254.0)	13.50 (342.9)	7.50 (190.5)	8.00 (203.2)
1600	1200	1800	10.00 (254.0)	14.00 (355.6)	8.00 (203.2)	8.50 (215.9)
2000	1350	2250	10.00 (254.0)	14.50 (368.3)	9.00 (228.6)	9.00 (228.6)
—	1600	—	10.00 (254.0)	15.00 (381.0)	9.00 (228.6)	9.50 (241.3)
2500	2000	3000	10.00 (254.0)	16.00 (406.4)	10.00 (254.0)	10.50 (266.7)
3200	—	3800	12.00 (304.8)	18.50 (469.9)	12.50 (317.5)	13.00 (330.2)
4000	2500	4500	12.00 (304.8)	19.50 (495.3)	14.00 (355.6)	14.00 (355.6)
—	3200	—	12.00 (304.8)	20.50 (520.7)	14.50 (368.3)	15.00 (381.0)
5000	4000	5800	12.00 (304.8)	22.50 (571.5)	16.50 (419.1)	16.50 (419.1)
Downward/Forward/Rearward						
225	225	225	13.00 (330.2)	13.00 (330.2)	7.00 (177.8)	7.00 (177.8)
400	400	400	13.00 (330.2)	13.00 (330.2)	7.00 (177.8)	7.00 (177.8)
600	—	630	13.00 (330.2)	13.00 (330.2)	7.00 (177.8)	7.00 (177.8)
800	600	1000	13.00 (330.2)	13.00 (330.2)	7.00 (177.8)	7.00 (177.8)
1000	—	1200	13.00 (330.2)	13.00 (330.2)	7.00 (177.8)	7.50 (190.5)
1200	800	1400	13.00 (330.2)	13.50 (342.9)	7.50 (190.5)	7.50 (190.5)
1350	1000	1550	13.00 (330.2)	13.50 (342.9)	7.50 (190.5)	8.00 (203.2)
1600	1200	1800	13.00 (330.2)	14.00 (355.6)	8.00 (203.2)	8.50 (215.9)
2000	1350	2250	13.00 (330.2)	14.50 (368.3)	9.00 (228.6)	9.00 (228.6)
—	1600	—	13.00 (330.2)	15.00 (381.0)	9.00 (228.6)	9.50 (241.3)
2500	2000	3000	13.00 (330.2)	16.00 (406.4)	10.00 (254.0)	10.50 (266.7)
3200	—	3800	13.00 (330.2)	18.50 (469.9)	12.50 (317.5)	13.00 (330.2)
4000	2500	4500	13.00 (330.2)	19.50 (495.3)	14.00 (355.6)	14.00 (355.6)
—	3200	—	13.00 (330.2)	20.50 (520.7)	14.50 (368.3)	15.00 (381.0)
5000	4000	5800	13.00 (330.2)	22.50 (571.5)	16.50 (419.1)	16.50 (419.1)

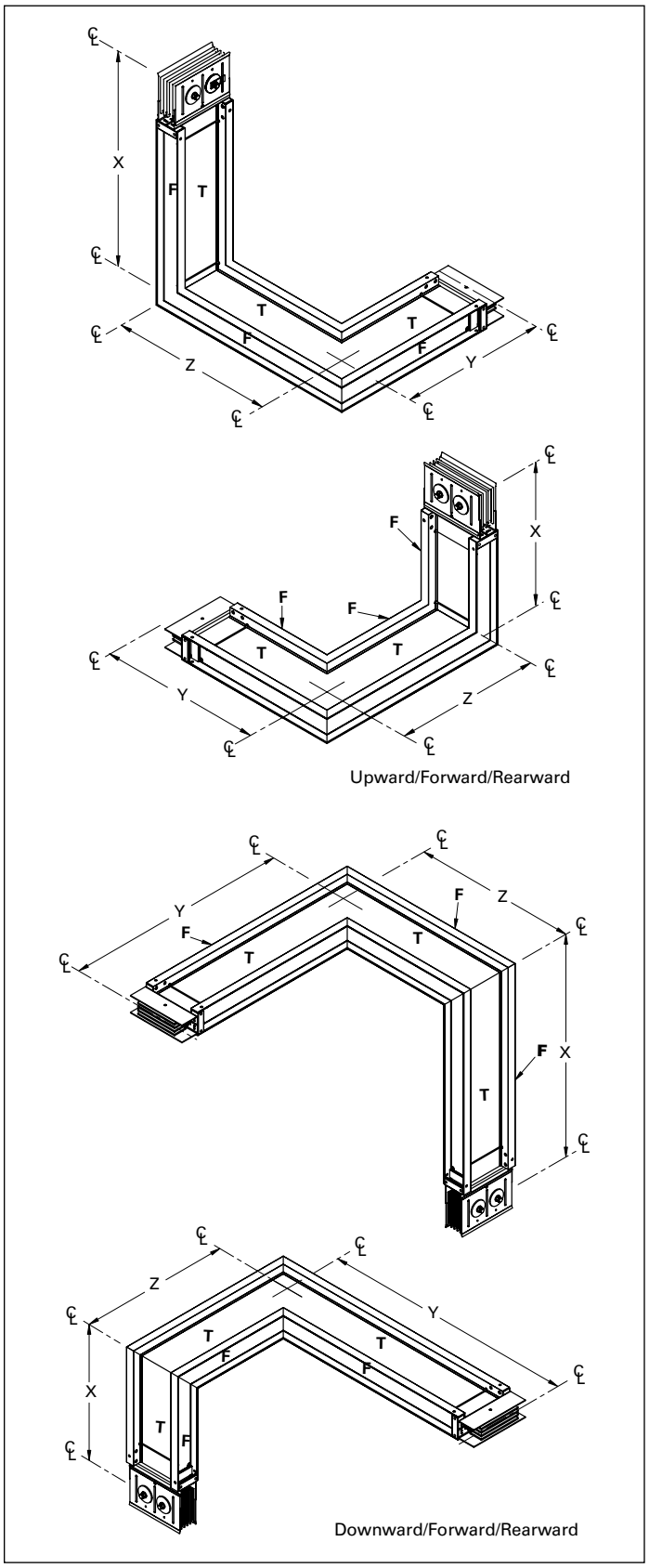

Figure 24.1-21. Combination Offsets

Tees

See Figure 24.1-23

A tee is a busway fitting suitable for connection in three directions.
The minimum leg lengths are shown in **Table 24.1-21** and **Table 24.1-22**.

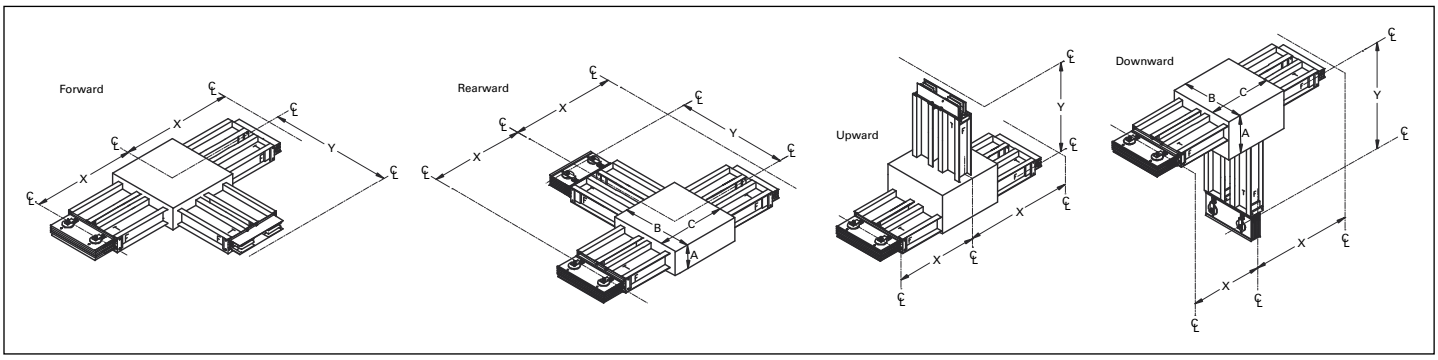

Figure 24.1-22. Tees

Table 24.1-21. Forward and Rearward Tees

UL 857		IEC 439	Minimum Leg Lengths Dimensions in Inches (mm)				
Cu	Al	Cu					
Ampere Rating	Ampere Rating	Ampere Rating	(X)	A	(Y)	B	C
225	225	225	13.00 (330.2)	—	13.00 (330.2)	—	—
400	12.5	400	13.00 (330.2)	—	13.00 (330.2)	—	—
600	18.6	630	13.00 (330.2)	—	13.00 (330.2)	—	—
800	600	1000	13.00 (330.2)	—	13.00 (330.2)	—	—
1000	—	1200	13.00 (330.2)	—	13.00 (330.2)	—	—
1200	800	1400	13.50 (342.9)	—	13.50 (342.9)	—	—
1350	1000	1550	13.50 (342.9)	—	13.50 (342.9)	—	—
1600	1200	1800	14.00 (355.6)	—	14.00 (355.6)	—	—
2000	1350	2250	14.50 (368.3)	—	14.50 (368.3)	—	—
—	1600	—	15.00 (381.0)	—	15.00 (381.0)	—	—
2500	2000	3000	16.00 (406.4)	—	16.00 (406.4)	—	—
3200	—	3800	27.25 (692.2)	8.00 (203.2)	26.38 (670.1)	19.39 (492.5)	21.12 (536.4)
4000	2500	4500	28.50 (723.9)	8.00 (203.2)	27.62 (701.6)	21.88 (555.8)	23.63 (600.2)
—	3200	—	29.25 (743.0)	8.00 (203.2)	28.38 (720.9)	23.41 (594.6)	25.12 (638.0)
5000	4000	5800	31.00 (787.4)	8.00 (203.2)	30.12 (765.1)	26.94 (684.3)	28.63 (727.2)

All dimensions are to the centerline of the Pow-R-Bridge.

Table 24.1-22. Upward and Downward Tees

UL 857		IEC 439	Minimum Leg Lengths Dimensions in Inches (mm)				
Cu	Al	Cu					
Ampere Rating	Ampere Rating	Ampere Rating	(X)	A	(Y)	B	C
225	225	225	21.25 (539.8)	12.25 (311.2)	25.50 (647.7)	5.00 (127.0)	9.25 (235.0)
400	400	400	21.25 (539.8)	12.25 (311.2)	25.50 (647.7)	5.00 (127.0)	9.25 (235.0)
600	—	630	21.25 (539.8)	12.25 (311.2)	25.50 (647.7)	5.00 (127.0)	9.25 (235.0)
800	600	1000	21.25 (539.8)	12.25 (311.2)	25.50 (647.7)	5.00 (127.0)	9.25 (235.0)
1000	—	1200	21.88 (555.8)	12.25 (311.2)	25.50 (647.7)	5.62 (142.7)	10.50 (266.7)
1200	800	1400	22.38 (568.5)	12.25 (311.2)	25.50 (647.7)	6.12 (155.4)	11.50 (292.1)
1350	1000	1550	22.88 (581.2)	12.25 (311.2)	25.50 (647.7)	6.62 (168.1)	12.50 (317.5)
1600	1200	1800	23.88 (606.6)	12.25 (311.2)	25.50 (647.7)	7.62 (193.5)	14.50 (368.3)
2000	1350	2250	25.12 (638.1)	12.25 (311.2)	25.50 (647.7)	8.65 (219.7)	17.00 (431.8)
—	1600	—	25.88 (657.4)	12.25 (311.2)	25.50 (647.7)	9.65 (245.1)	18.50 (470.0)
2500	2000	3000	27.62 (701.6)	12.25 (311.2)	25.50 (647.7)	11.42 (290.1)	22.00 (558.8)
3200	—	3800	23.88 (606.6)	12.25 (311.2)	25.50 (647.7)	16.38 (416.1)	14.50 (368.3)
4000	2500	4500	25.12 (638.1)	12.25 (311.2)	25.50 (647.7)	18.65 (473.7)	17.00 (473.7)
—	3200	—	25.88 (637.4)	12.25 (311.2)	25.50 (647.7)	20.41 (518.4)	18.50 (470.0)
5000	4000	5800	27.62 (701.6)	12.25 (311.2)	25.50 (647.7)	23.94 (608.1)	22.00 (558.8)

Crosses

See Figure 24.1-23

A cross is a busway fitting suitable for connection in four directions. It is applied when a bus run must branch off in three directions, all in the same plane.

Table 24.1-23. Forward and Rearward Crosses

Ampere Rating			Minimum Leg Lengths Dimensions in Inches (mm)	
UL 857		IEC 439		
Cu	Al	Cu	(X)	(Y)
225	225	225	13.00 (330.2)	13.00 (330.2)
400	400	400	13.00 (330.2)	13.00 (330.2)
600	—	630	13.00 (330.2)	13.00 (330.2)
800	600	1000	13.00 (330.2)	13.00 (330.2)
1000	—	1200	13.00 (330.2)	13.00 (330.2)
1200	800	1400	13.50 (342.9)	13.50 (342.9)
1350	1000	1550	13.50 (342.9)	13.50 (342.9)
1600	1200	1800	14.00 (355.6)	14.00 (355.6)
2000	1350	2250	14.50 (368.3)	14.50 (368.3)
—	1600	—	15.00 (381.0)	15.00 (381.0)
2500	2000	3000	16.00 (406.4)	16.00 (406.4)
3200	—	3800	21.70 (551.2)	21.70 (551.2)
4000	2500	4500	22.94 (582.7)	22.94 (582.7)
—	3200	—	23.71 (602.2)	23.71 (602.2)
5000	4000	5800	25.09 (637.3)	25.09 (637.3)

All dimensions are to the centerline of the Pow-R-Bridge.

Table 24.1-24. Upward and Downward Crosses

Ampere Rating			Minimum Leg Lengths Dimensions in Inches (mm)	
UL 857		IEC 439		
Cu	Al	Cu	(X)	(Y)
225	225	225	21.25 (539.8)	25.50 (647.7)
400	400	400	21.25 (539.8)	25.50 (647.7)
600	—	630	21.25 (539.8)	25.50 (647.7)
800	600	1000	21.25 (539.8)	25.50 (647.7)
1000	—	1200	21.88 (555.8)	25.50 (647.7)
1200	800	1400	22.38 (568.5)	25.50 (647.7)
1350	1000	1550	22.88 (581.2)	25.50 (647.7)
1600	1200	1800	23.88 (606.6)	25.50 (647.7)
2000	1350	2250	25.12 (638.1)	25.50 (647.7)
—	1600	—	25.88 (657.4)	25.50 (647.7)
2500	2000	3000	27.62 (701.6)	25.50 (647.7)
3200	—	3800	23.88 (606.6)	25.50 (647.7)
4000	2500	4500	25.12 (638.1)	25.50 (647.7)
—	3200	—	25.88 (637.4)	25.50 (647.7)
5000	4000	5800	27.62 (701.6)	25.50 (647.7)

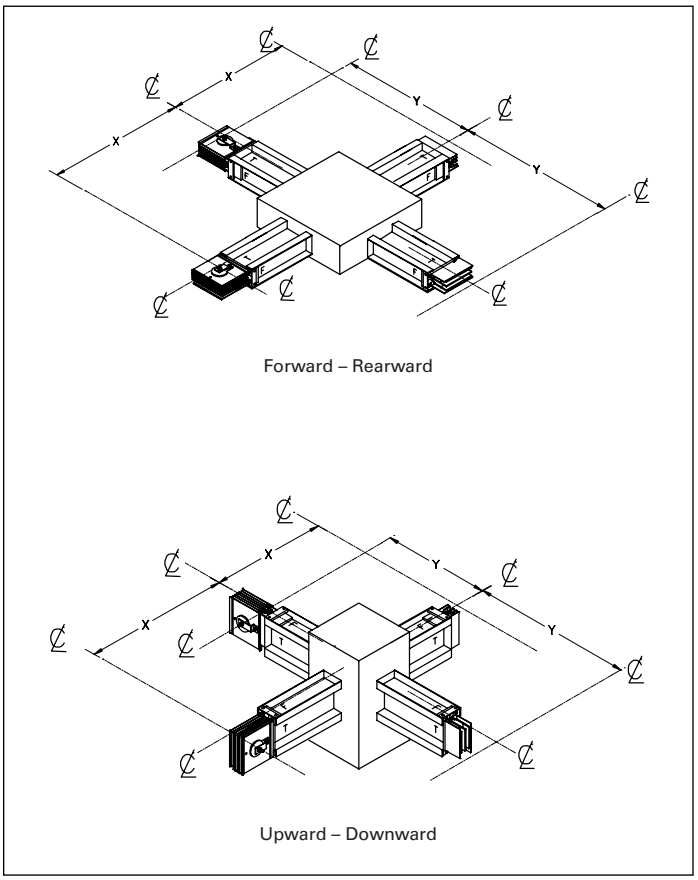

Figure 24.1-23. Crosses

Tap Boxes

End Cable Tap Box

See Figure 24.1-24

End cable tap boxes are used to feed a run of busway with cable and conduit or where loads served by busway are connected without the need for overcurrent protection. For indoor applications, the "T" side, side opposite "T" and the end panel are removable for access to the lugs. For outdoor applications, these panels are gasketed to prevent moisture from entering. In addition, the outdoor end cable tap boxes are provided with removable gasketed side access panels located on the "F" and side opposite "F" for more accessibility to the lugs. Removable side access panels are available on indoor cable tap boxes upon request.

All dimensions are to the centerline of the Pow-R-Bridge.

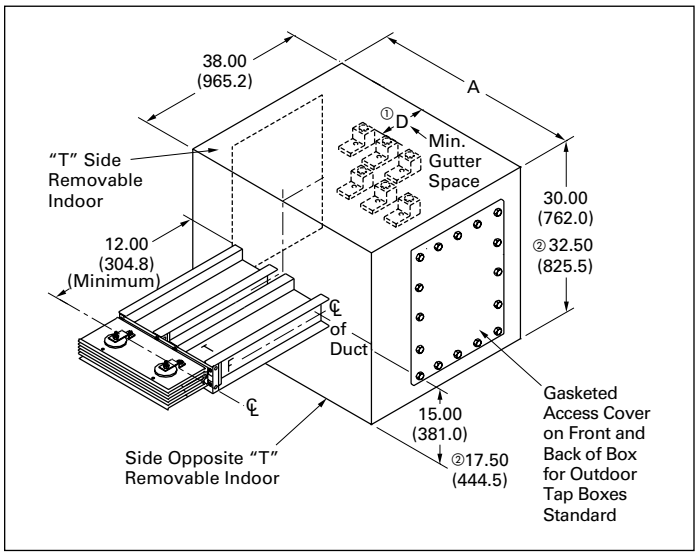

Figure 24.1-24. End Cable Tap Box

① Dimension D: For mechanical lugs = 21.34 inches (542.0 mm).
For compression lugs = 19.44 inches (493.8 mm).
② 200% neutral.

Table 24.1-25. End Cable Tap Box Dimension

Copper Dimensions					Aluminum Dimensions			Quantity of Mechanical Terminals, Range — One #4 (20 mm²) — 600 kcmil (300 mm²) Two 1/0 (50 mm²) — 250 kcmil (120 mm²) ③					
UL 857		IEC 439		Dimension (A) w Inches (mm) ⑤	UL 857		Dimension (A) in Inches (mm) ⑤	Copper			Aluminum		
Ampere Rating	Weight (lb) ③	Ampere Rating	Weight (lb) ③		Ampere Rating	Weight (lb) ③		G ⑥	P ⑦	N ⑧	G ⑥	P ⑦	N ⑧
225	122.9	225	122.9	12.00 (304.8)	225	63.3	12.00 (304.8)	1	2	4	1	2	4
400	129.3	400	129.3	12.00 (304.8)	400	65.7	12.00 (304.8)	1	2	4	1	2	4
600	136.5	630	136.5	12.00 (304.8)	—	69.1	12.00 (304.8)	1	2	4	—	—	—
800	144.3	1000	144.3	12.00 (304.8)	600	73.5	12.00 (304.8)	2	3	5	1	2	4
1000	152.8	1200	152.8	12.00 (304.8)	—	82.1	12.00 (304.8)	2	3	6	—	—	—
1200	158.8	1400	158.8	12.00 (304.8)	800	88.2	12.00 (304.8)	2	4	8	2	3	5
1350	166.2	1550	166.2	12.00 (304.8)	1000	91.8	12.00 (304.8)	2	4	8	2	3	6
1600	188.0	1800	188.0	20.50 (520.7)	1200	119.4	12.00 (304.8)	3	5	9	2	4	8
2000	217.1	2250	217.1	20.50 (520.7)	1350	129.9	20.50 (520.7)	3	6	12	2	4	8
—	—	—	—	—	1600	136.2	24.50 (622.3)	—	—	—	3	5	9
2500	229.5	3000	229.5	24.50 (622.3)	2000	143.6	24.50 (622.3)	4	8	16	3	6	12
3200	247.3	3800	247.3	30.50 (774.5)	—	—	—	5	9	18	—	—	—
4000	264.1	4500	264.1	45.00 (1143.0)	2500	150.0	30.50 (774.5)	6	12	24	4	8	16
—	—	—	—	—	3200	—	30.50 (774.5)	—	—	—	5	9	18
5000	282.2	5800	282.2	45.00 (1143.0)	4000	—	45.00 (1143.0)	7	15	30	6	12	24

③ Interpolated weights reference maximum weight per ampacity; weight is based on 1-foot stub.
④ For compression lugs, factory provides provisions only.
⑤ All dimensions shown in **Figure 24.1-24** remain constant regardless of system wiring configuration.
⑥ Denotes quantity of terminals per ground bus.
⑦ Denotes quantity of terminals per phase and 100% neutral bus.
⑧ Denotes quantity of terminals per 200% neutral bus option.

Center Cable Tap Box

See Figure 24.1-25

Center cable tap boxes are used to center feed a run of busway with cable and conduit or where loads served by the busway are connected without the need for overcurrent protection. For indoor applications, the "T" side, side opposite "T" and the end panel are removable for access to the lugs. For outdoor applications, these panels are gasketed to prevent moisture from entering. In addition, the outdoor center cable tap boxes are provided with removable gasketed access panels located on the front and back for more accessibility to the lugs.

All dimensions are to the centerline of the Pow-R-Bridge.

Table 24.1-26. Center Tap Box Details—Dimension C

Dimension C in Inches (mm)				
Copper				
225–1350 A	**1600–2000 A**	**2500 A**	**3200 A**	**4000–5000 A**
3.63 (92.2)	4.75 (120.7)	6.00 (152.4)	10.75 (273.1)	12.25 (311.2)
Aluminum				
225–1000 A	**1200–1350 A**	**1600–2000 A**	**2500–3200 A**	**4000 A**
3.63 (92.2)	4.75 (120.7)	6.00 (152.4)	10.75 (273.1)	12.25 (311.2)

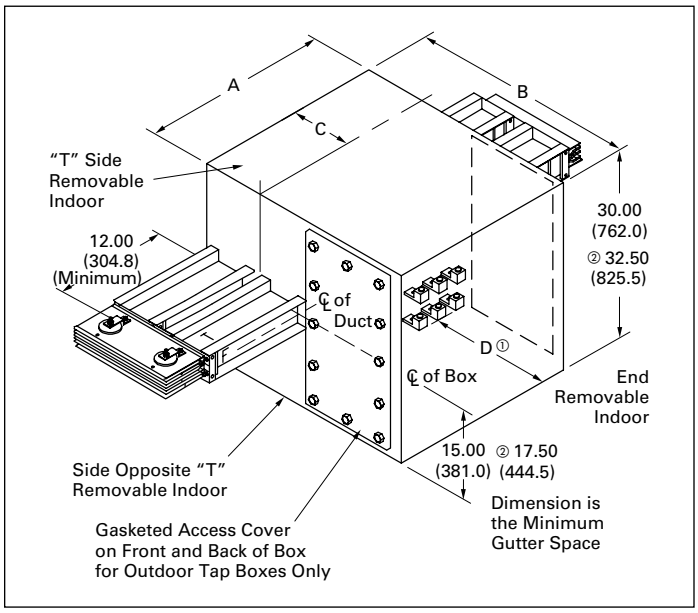

Figure 24.1-25. Center Cable Tap Box

① Dimension D: For mechanical lugs = 21.34 inches (542.0 mm). For compression lugs = 19.25 inches (489.0 mm).
② 200% neutral.

Table 24.1-27. Center Tap Box Details—Dimensions A and B

Ampere Rating		Dimensions in Inches (mm)		Ampere Rating	Dimensions in Inches (mm)		Quantity of Mechanical Terminals, Range—One #4 (20 mm²)—600 kcmil (300 mm²) Two 1/0 (50 mm²)—250 kcmil (120 mm²) ③					
UL 857	**IEC 439**			**UL 857**			**Copper**			**Aluminum**		
Cu	**Cu**	**(A) ④**	**(B) ④**	**Al**	**(A) ④**	**(B) ④**	**G ⑤**	**P ⑥**	**N ⑦**	**G ⑤**	**P ⑥**	**N ⑦**
225	225	16.50 (419.1)	40.00 (1016.0)	225	16.50 (419.1)	40.00 (1016.0)	1	2	4	1	2	4
400	400	16.50 (419.1)	40.00 (1016.0)	400	16.50 (419.1)	40.00 (1016.0)	1	2	4	1	2	4
600	630	16.50 (419.1)	40.00 (1016.0)	—	16.50 (419.1)	40.00 (1016.0)	1	2	4	—	—	—
800	1000	16.50 (419.1)	40.00 (1016.0)	600	16.50 (419.1)	40.00 (1016.0)	2	3	5	1	2	4
1000	1200	16.50 (419.1)	40.00 (1016.0)	—	16.50 (419.1)	40.00 (1016.0)	2	3	6	—	—	—
1200	1400	16.50 (419.1)	40.00 (1016.0)	800	16.50 (419.1)	40.00 (1016.0)	2	4	8	2	3	5
1350	1550	16.50 (419.1)	40.00 (1016.0)	1000	16.50 (419.1)	40.00 (1016.0)	2	4	8	2	3	6
1600	1800	20.50 (520.7)	42.50 (1079.5)	1200	20.50 (520.7)	42.50 (1079.5)	3	5	9	2	4	8
2000	2250	20.50 (520.7)	42.50 (1079.5)	1350	20.50 (520.7)	42.50 (1079.5)	3	6	12	2	4	8
—	—	—	—	1600	24.50 (622.3)	45.00 (1143.0)	—	—	—	3	5	9
2500	3000	24.50 (622.3)	45.00 (1143.0)	2000	24.50 (622.3)	45.00 (1143.0)	4	8	16	3	6	12
3200	3800	30.38 (774.5)	58.00 (1473.2)	—	—	—	5	9	18	—	—	—
4000	4500	45.00 (1143.0)	60.50 (1536.7)	2500	30.38 (771.7)	58.00 (1473.0)	6	12	24	4	8	16
—	—	—	—	3200	30.38 (771.7)	58.00 (1473.0)	—	—	—	5	9	18
5000	5800	45.00 (1143.0)	60.50 (1536.7)	4000	45.00 (1143.0)	60.50 (1536.7)	7	15	30	6	12	24

③ For compression lugs, factory provides provisions only.
④ All dimensions shown in **Figure 24.1-25** remain constant regardless of system wiring configuration.
⑤ Denotes quantity of terminals per ground bus.
⑥ Denotes quantity of terminals per phase and 100% neutral bus.
⑦ Denotes quantity of terminals per 200% neutral bus option.

Weatherheads

See Figure 24.1-26

Weatherheads are used for outdoor utility/transformer connections to busway. The side opposite of "T" is removable for access to the lugs.

All dimensions are to the centerline of the Pow-R-Bridge.

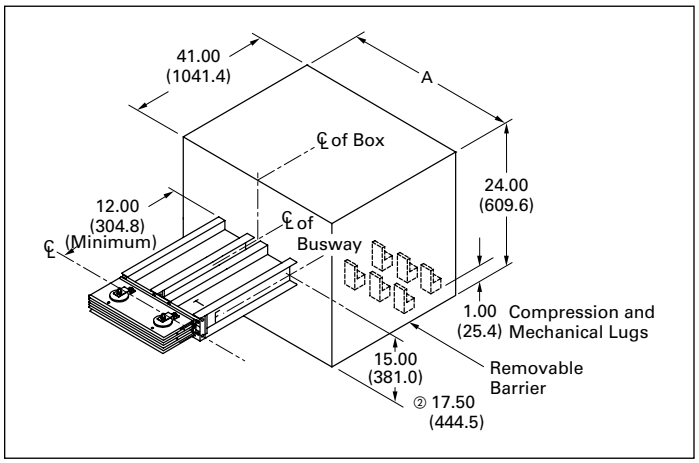

Figure 24.1-26. Weatherhead Details

Table 24.1-28. Weatherhead Details

Ampere Rating			Copper Minimum Dimension (A)	Aluminum Minimum Dimension (A)	Quantity of Mechanical Terminals, Range— One #4 (20 mm²)—600 kcmil (300 mm²) Two 1/0 (50 mm²)—250 kcmil (120 mm²) ①					
UL 857		IEC 439	Inches (mm)	Inches (mm)	Copper			Aluminum		
Cu	Al	Cu			G ②	P ④	N ⑤	G ③	P ④	N ⑤
225	225	225	16.50 (419.1)	16.50 (419.1)	1	2	4	1	2	4
400	400	400	16.50 (419.1)	16.50 (419.1)	1	2	4	1	2	4
600	—	630	16.50 (419.1)	16.50 (419.1)	1	2	4	—	—	—
800	600	1000	16.50 (419.1)	16.50 (419.1)	2	3	5	1	2	4
1000	—	1200	16.50 (419.1)	16.50 (419.1)	2	3	6	—	—	—
1200	800	1400	16.50 (419.1)	16.50 (419.1)	2	4	8	2	3	5
1350	1000	1550	16.50 (419.1)	16.50 (419.1)	2	4	8	2	3	6
1600	1200	1800	16.50 (419.1)	16.50 (419.1)	3	5	9	2	4	8
2000	1350	2250	16.50 (419.1)	16.50 (419.1)	3	6	12	2	4	8
—	1600	—	16.50 (419.1)	16.50 (419.1)	—	—	—	3	5	9
2500	2000	3000	30.00 (762.0)	16.50 (419.1)	4	8	16	3	6	12
3200	—	3800	30.00 (762.0)	30.00 (762.0)	5	9	18	—	—	—
4000	2500	4500	40.00 (1016.0)	30.00 (762.0)	6	12	24	4	8	16
—	3200	—	40.00 (1016.0)	30.00 (762.0)	—	—	—	5	9	18
5000	4000	5800	40.00 (1016.0)	40.00 (1016.0)	7	15	30	6	12	24

① For compression lugs, factory provides provisions only.
② 200% neutral.
③ Denotes quantity of terminals per ground bus.
④ Denotes quantity of terminals per phase and 100% neutral bus.
⑤ Denotes quantity of terminals per 200% neutral bus option.

Expansion Joints

See Figure 24.1-27

Expansion joints accommodate the expansion and contraction of bus bars with respect to the enclosure. They compensate for the difference in the coefficient of expansion of the aluminum housing and the copper or aluminum bus bars. Expansion joints must be used wherever a run of busway crosses an expansion joint of a building. They should also be installed in the center of extremely long straight runs of busway; one every 300 feet (91 m) for copper or one every 225 feet (68 m) for aluminum. The use of expansion joints should be engineered for individual installations. Minimum dimensions are shown in **Table 24.1-29**.

All dimensions are to the centerline of the Pow-R-Bridge.

Table 24.1-29. Expansion Joints

UL 857				IEC 439		Dimensions (A) in Inches (mm) ①
Cu		Al		Cu		
Ampere Rating	Weight (lb/ft)	Ampere Rating	Weight (lb/ft)	Ampere Rating	Weight (lb/ft)	
225	44.8	225	32.0	225	44.8	12.00 (304.8)
400	57.3	400	47.3	400	57.3	12.00 (304.8)
600	69.8	600	53.8	630	69.8	12.00 (304.8)
800	82.3	800	60.2	1000	82.3	12.00 (304.8)
1000	94.9	1000	66.6	1200	94.9	12.00 (304.8)
1200	107.4	1200	73.0	1400	107.4	12.00 (304.8)
1350	119.9	1350	79.5	1550	119.9	16.50 (419.1)
1600	132.5	1600	85.9	1800	132.5	16.50 (419.1)
2000	145.0	—	92.3	2250	145.0	16.50 (419.1)
2500	157.5	2000	105.9	3000	157.5	20.50 (520.7)
3200	170.0	—	119.4	3800	170.0	20.50 (520.7)
4000	182.6	2500	133.0	4500	182.6	24.50 (622.3)
—	—	3200	—	—	—	24.50 (622.3)
5000	233.3	4000	—	5800	233.3	30.25 (768.4)

① Dimension remains as shown regardless of system configuration.
② Interpolated weights reference maximum weight per ampacity.

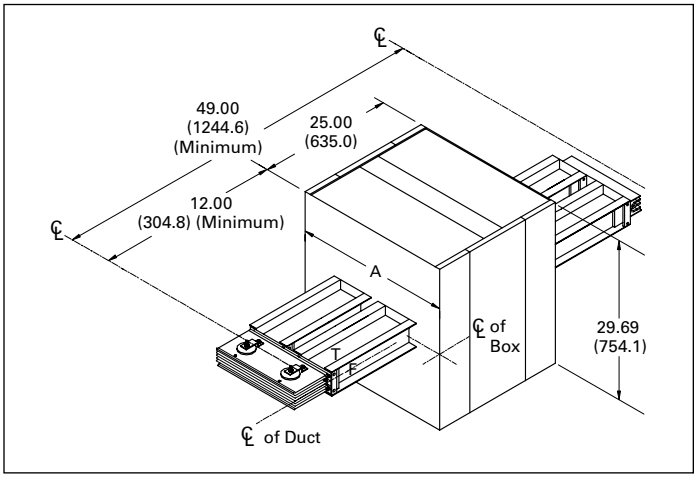

Figure 24.1-27. Expansion Joints

Phase Transpositions

See Figure 24.1-28 and Figure 24.1-29

Phase transposition fittings are used in applications where a phase rotation is needed due to a change in phasing from the source equipment to the load equipment. Both 90° and 180° rotations are possible. In each case, all conductors are rotated.

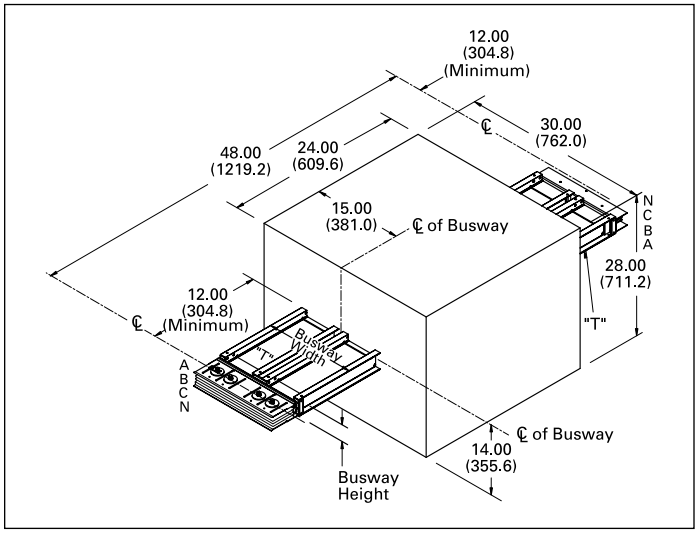

Figure 24.1-28. 180° Transposition—Dimensions in Inches (mm)

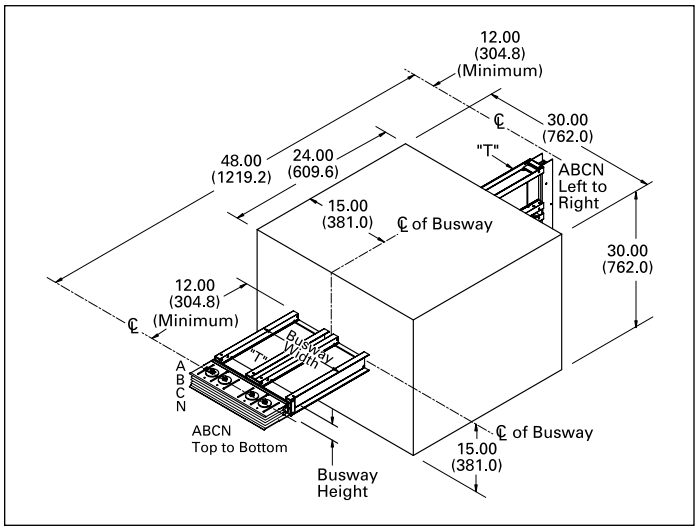

Figure 24.1-29. 90° Transposition—Dimensions in Inches (mm)

Transformer Taps

Single-Phase Transformer Taps

See Figure 24.1-30

Single-phase transformer taps arrangements are used for connections to three single-phase transformers. The bus extensions do not include drilling or lugs (see **Figure 24.1-2** on **Page 24.1-2** for wiring configuration designations).

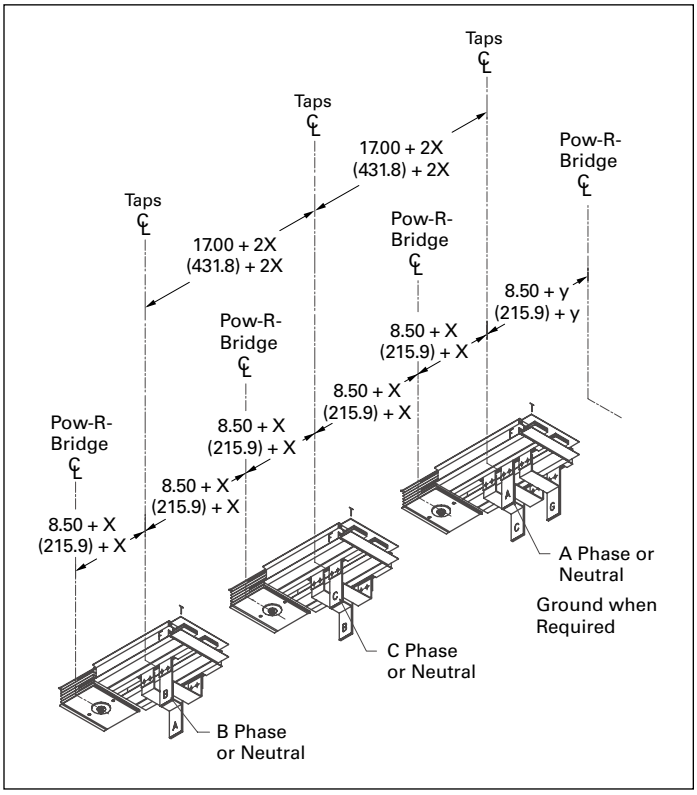

Figure 24.1-30. Three Single-Phase Transformer Taps

Table 24.1-30. Single-Phase Transformer Taps

Ampere Rating			Minimum Dimensions in Inches (mm) ①	
UL 857		IEC 439		
Cu	Al	Cu	(X)	(Y)
225	225	225	4.00 (101.6)	7.00 (177.8)
400	400	400	4.00 (101.6)	7.00 (177.8)
600	—	630	4.00 (101.6)	7.00 (177.8)
800	600	1000	4.00 (101.6)	7.00 (177.8)
1000	—	1200	4.50 (114.3)	9.75 (247.7)
1200	800	1400	5.00 (127.0)	10.75 (273.1)
1350	1000	1550	5.50 (139.7)	11.75 (298.5)
1600	1200	1800	6.50 (165.1)	13.75 (349.3)
2000	1350	2250	7.75 (196.9)	16.25 (412.8)
—	1600	—	8.50 (215.9)	17.50 (444.5)
2500	2000	3000	10.25 (260.4)	21.25 (539.8)
3200	—	3800	6.50 (165.1)	13.75 (349.3)
4000	2500	4500	7.75 (196.9)	16.25 (412.8)
—	3200	—	8.50 (215.9)	17.50 (444.5)
5000	4000	5800	10.25 (260.4)	21.25 (539.8)

① Includes ground tap.

Three-Phase Transformer Taps

See Figure 24.1-31

Three-phase transformer taps are used when making connections to a three-phase transformer. The bus extensions do not include drilling or lugs.

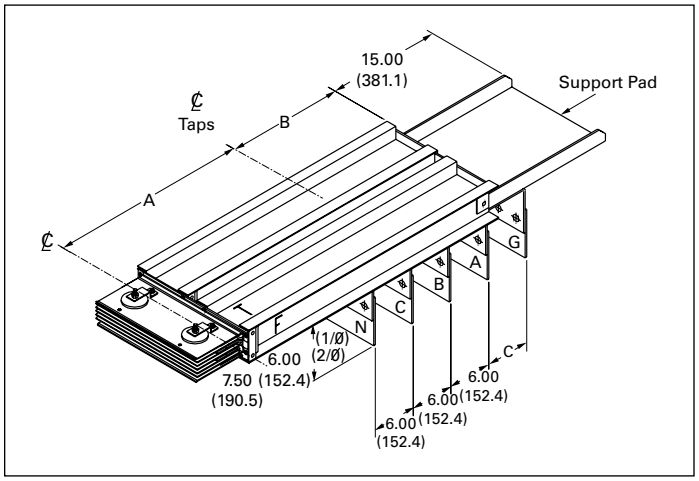

Figure 24.1-31. Three-Phase Transformer Taps

Table 24.1-31. (A) Minimum Dimensions

Wire Designation	3W/ 3WH	3WG/ 3WHG/ 3WI	4W/ 4WH	4WG/4WHG/4WI/ 4WNG/4WNHG/4WNI
Inches	16.50	16.50	19.50	19.50
mm	419.1	419.1	495.3	495.3

Table 24.1-32. (B) Minimum Dimensions

Wire Designation	3W/ 3WH	3WG/ 3WHG/ 3WI	4W/ 4WH	4WG/4WHG/4WI/ 4WNG/4WNHG/4WNI
Inches	6.25	12.12	9.25	15.12
mm	158.8	307.8	235.0	384.0

Table 24.1-33. (C) Minimum Dimensions

Wire Designation	50% Housing Ground	50% Integral Ground and 100% Ground
Inches	3.00	6.00
mm	76.2	152.4

Transformer Throat Connections

See Figure 24.1-32 and Figure 24.1-33

A transformer throat is used when making connections to a liquid-filled substation transformer. All transformer throat connections include flexible connectors between the transformer low voltage spades and Pow-R-Way III bus bars. For transformers with drilled flanges, the busway will bolt to the transformer throat instead of using a sealing ring.

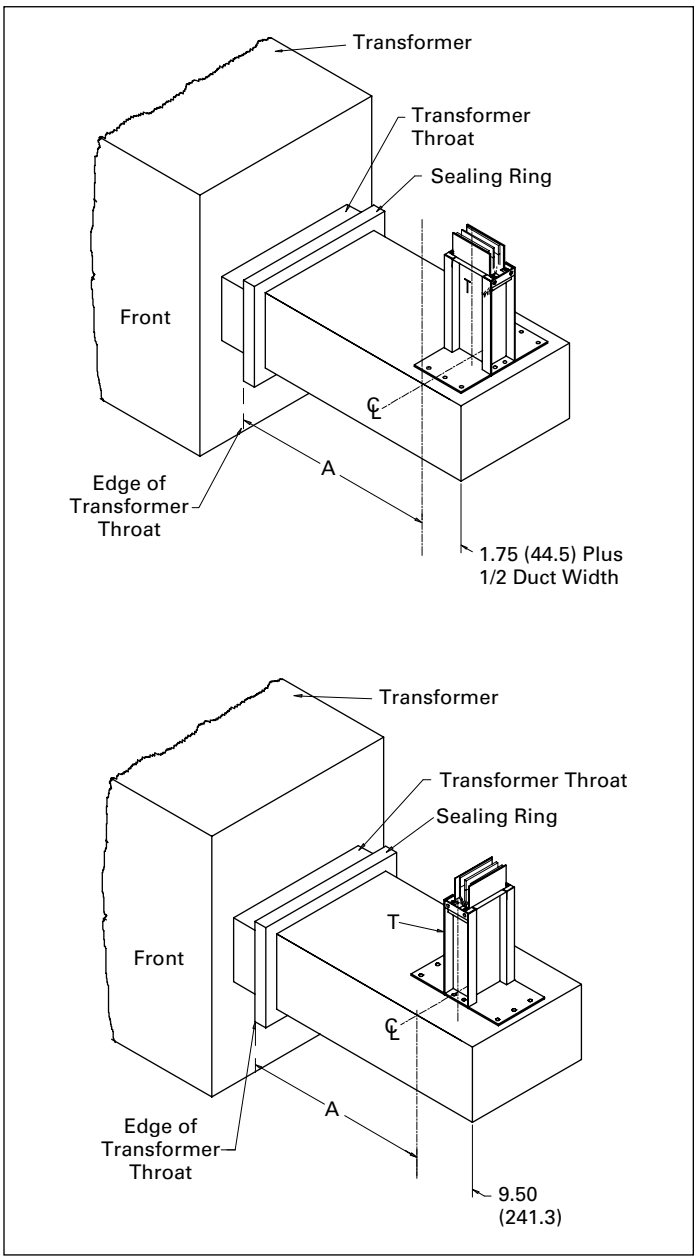

Figure 24.1-32. Transformer Throat

Table 24.1-34. Transformer Throat Connections

Ampere Rating		Bars Per Phase	Minimum Dimensions
UL 857	IEC 439		(A) Inches (mm)
Aluminum			
225–1350	225–1550	1	26.00 (660.4)
1600–2000	1600–2000	1	28.50 (723.9)
2500–4000	2500–4000	2	31.50 (800.1)
Copper			
225–2000	225–2500	1	26.00 (660.4)
2500	2500–3000	1	28.50 (723.9)
3200–5000	3200–5800	2	31.50 (800.1)

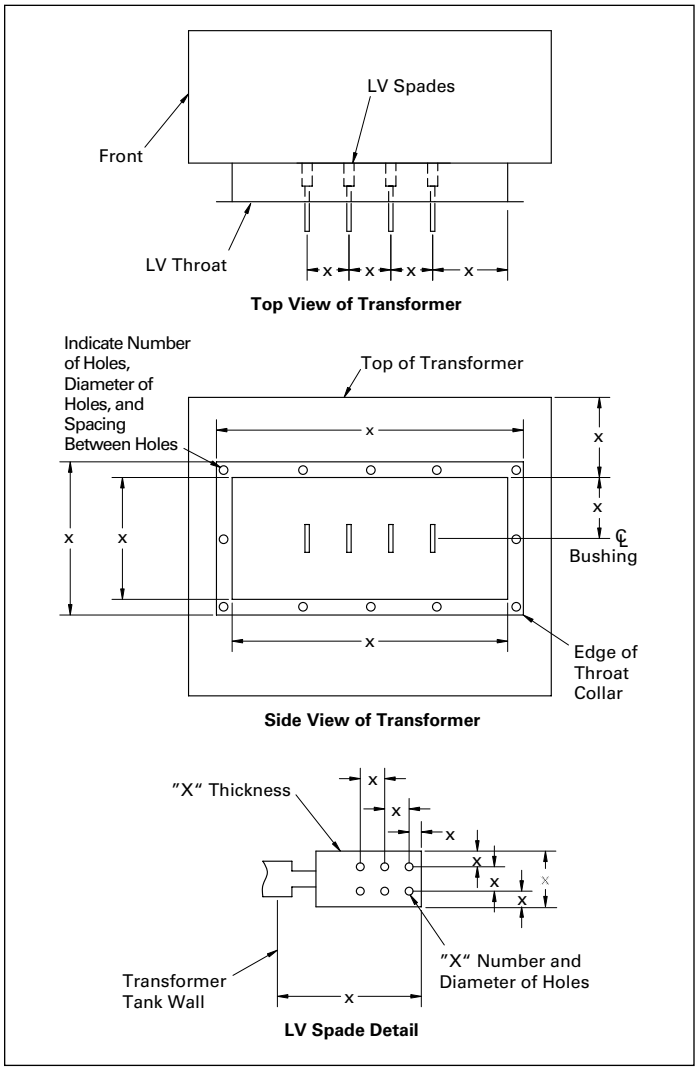

Figure 24.1-33. Transformer Throat Connection Detail

Note: "X" indicates required transformer measurements needed for transformer throat design.

Transformer Flange Connections

See Figure 24.1-34 and Figure 24.1-35

Transformer flange connections are used when making a connection to a dry-type substation transformer. Transformer flange connections include flexible connectors between the transformer low voltage spades and the Pow-R-Way III flange bus bars. Hardware is supplied to bolt the flange plate to the transformer enclosure.

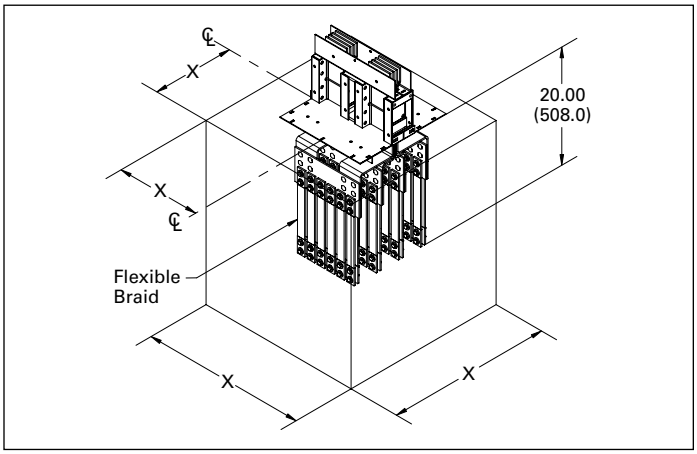

Figure 24.1-34. Transformer Flange Connections

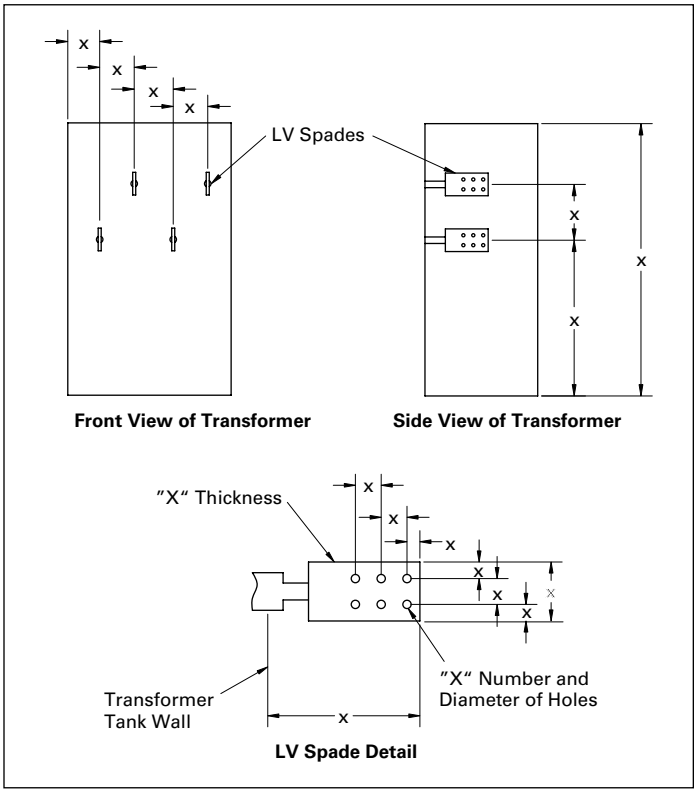

Figure 24.1-35. Transformer Flange Connection Detail

Note: "X" indicates required transformer measurements needed for transformer flange connection design.

Reducers

Protected Reducers

See Figure 24.1-36

Protected reducers are used to reduce the ampacity of busway using either a circuit breaker or a fused, non-automatic circuit breaker overprotection device. Both serve as a disconnecting means. The line side of the cubicle is connected to the higher rated busway and the load side is connected to the lower (reduced) rated busway.

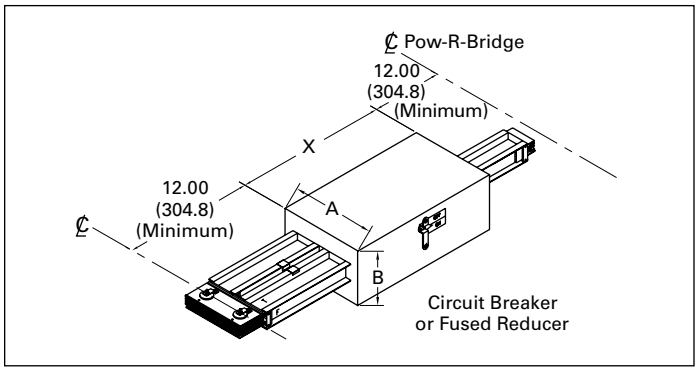

Figure 24.1-36. Circuit Breaker or Fused Reducer

Table 24.1-35. Circuit Breaker and Fused Reducer Dimensions

Circuit Breaker Reducer				Fusible Switch Reducer			
Breaker Amperes	A	B	X	Fuse Rating	A	B	X
	Inches (mm)				Inches (mm)		
225	18.25 (463.6)	18.00 (457.2)	34.00 (863.6)	225	18.25 (463.6)	18.00 (457.2)	42.25 (1073.2)
400	18.25 (463.6)	18.00 (457.2)	34.00 (863.6)	400	18.25 (463.6)	18.00 (457.2)	54.00 (1371.6)
600	18.25 (463.6)	18.00 (457.2)	34.00 (863.6)	600	18.25 (463.6)	18.00 (457.2)	60.00 (1524.0)
800	18.25 (463.6)	18.00 (457.2)	42.25 (1073.2)	800	18.25 (463.6)	18.00 (457.2)	60.00 (1524.0)
1000	18.25 (463.6)	18.00 (457.2)	42.25 (1073.2)	1000	18.25 (463.6)	18.00 (457.2)	60.00 (1524.0)
1200	18.25 (463.6)	18.00 (457.2)	42.25 (1073.2)	1200	18.25 (463.6)	18.00 (457.2)	60.00 (1524.0)
1600	26.25 (666.8)	20.00 (508.0)	48.00 (1219.2)	—	—	—	—
2000	26.25 (666.8)	20.00 (508.0)	48.00 (1219.2)	—	—	—	—

Non-Protected Reducers

See Figure 24.1-37

Non-protected reducers are used to reduce the ampacity of the busway without overcurrent devices. Per NEC Section 364.11, for industrial applications, no overcurrent protection is required where the busway is reduced in size, provided the length of the smaller busway does not extend more than 50 feet (15.2 m) and has a current rating of at least one-third of the first upstream overcurrent device.

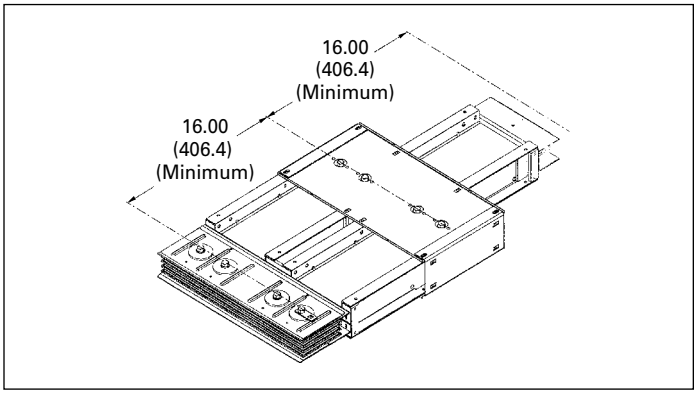

Figure 24.1-37. Non-Fused Reducer

Meter Center Power Takeoffs

Meter center power takeoffs (PTO) are designed to tap power off the busway and feed tenant meter stacks in high-rise applications. There are two types of power takeoffs, bridge joint and in-line. Both devices are UL listed.

Bridge Joint PTO

The bridge joint PTO shown in **Figure 24.1-38** mounts to the right or left side of the busway at a joint between two sections of busway. The bridge joint PTO comes with a main circuit breaker or main fusible switch. Bridge joint PTOs should be ordered with the meter stacks through the Eaton Lincoln, IL, facility.

The height of the busway bridge joint must be coordinated to meet local utility/code requirements for minimum/maximum meter socket heights. All dimensions shown are for reference only showing a typical installation.

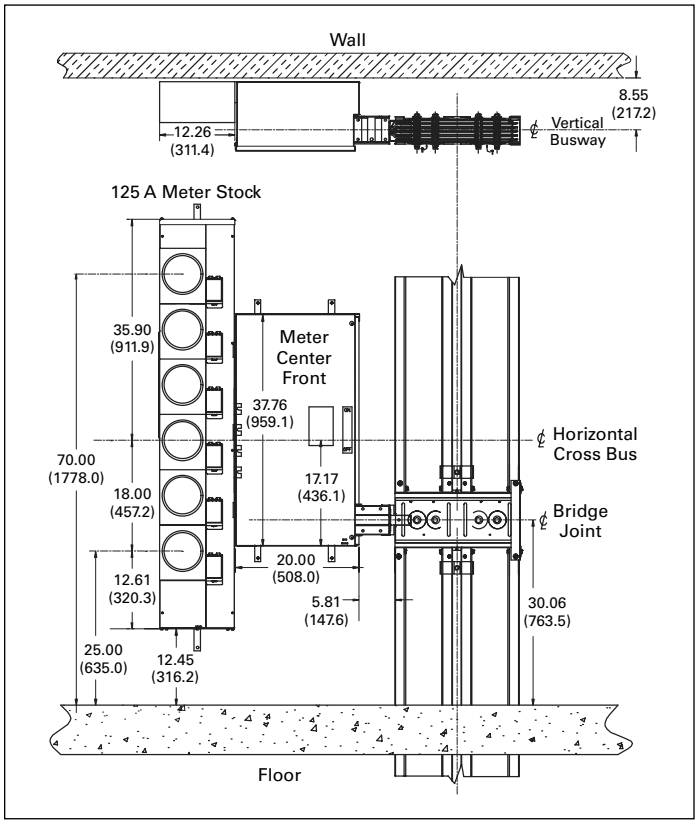

Figure 24.1-38. Bridge Joint PTO

In-Line PTO

The in-line PTO shown in **Figure 24.1-39** is built integral with the busway, having the busway pass through the device. This space-saving design reduces the horizontal wall space by up to 24.00 inches (609.6 mm). With this device there is no need to install a separate main device; saving installation time and money. This device is available with a main circuit breaker, main fusible switch or no main device. In-line PTOs should be ordered with the busway through the Eaton Greenwood, SC facility.

The height of the first busway joint up through the floor must be coordinated to meet local utility/code requirements for minimum/maximum meter socket heights not to exceed a minimum height of 16.00 inches (406.4 mm) above the floor. Meter stack may be placed to the left, right or both sides of the main device. All dimensions shown are for reference only showing a typical installation.

Note: If 5-high 200 A meter stacks are used, it is recommended to increase the bridge joint height from 20.00 inches (508.0 m) to 22.00–24.00 inches (558.8–609.6 mm). Attention must be given to the minimum/maximum heights of the meter sockets.

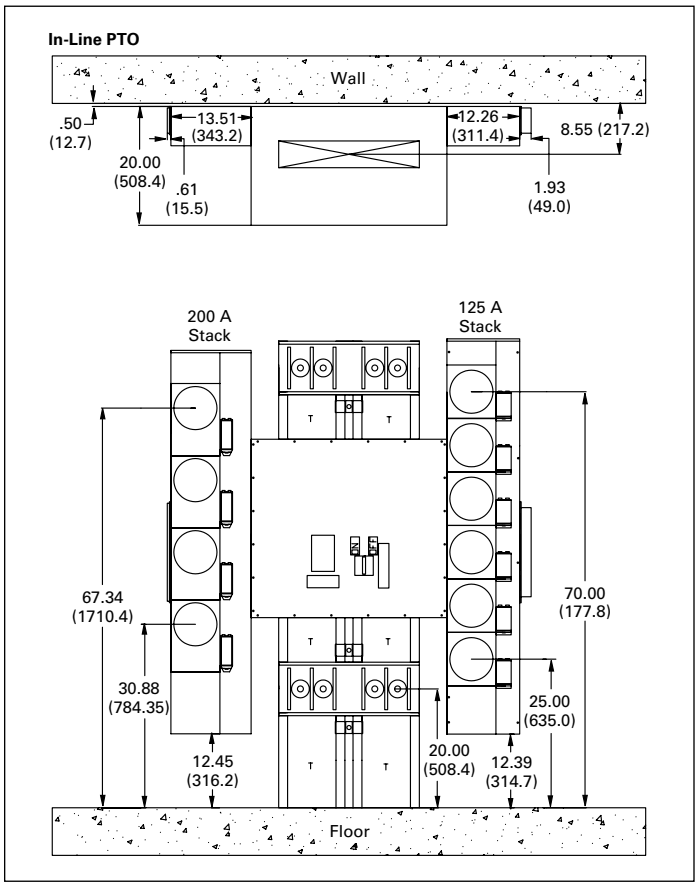

Figure 24.1-39. In-Line PTO

In-Line Power Takeoff

Main Circuit Breaker PTO

The in-line main circuit breaker PTO shown in **Figure 24.1-40** is available with trip ratings from 300 A up to 1200 A; using L, M and N frame circuit breakers. This device is indoor rated and may be weatherized upon request. See **Table 24.1-36** for dimensions and ratings.

Main Fusible Switch PTO

The in-line main fusible switch PTO shown in **Figure 24.1-41** is available with 400, 600 and 800 A switches; using Class "T" fuses. This device is indoor rated only. The switch handle is mounted in front, eliminating interference with the meter sockets and the need for spacers between the main device and meter stack. It comes with a hinged door, giving easy access to the fuses mounted below the main switch. See **Table 24.1-36** for dimensions and ratings.

Unprotected PTO

The in-line PTO with no main device shown in **Figure 24.1-42** comes with 1200 A horizontal cross bus as standard. This device is intended for use with six meter sockets or less, or as local code permits. See **Table 24.1-36** for dimensions and ratings.

Table 24.1-36. In-Line PTO Dimensions and Ratings

Device	Short-Circuit Rating (kAIC)	(A) Dimensions in Inches (mm)	
		1 Bar Per Phase	2 Bar Per Phase
Main Circuit Breaker			
LD	65	20.00 (508.0)	33.00 (838.2)
HLD	100	20.00 (508.0)	33.00 (838.2)
MDL	65	20.00 (508.0)	33.00 (838.2)
HMDL	100	20.00 (508.0)	33.00 (838.2)
NGS	65	20.00 (508.0)	33.00 (838.2)
NGH	100	20.00 (508.0)	33.00 (838.2)
Main Fusible Switch ①			
400 A	200	20.00 (508.0)	33.00 (838.2)
600 A	200	20.00 (508.0)	33.00 (838.2)
800 A	200	20.00 (508.0)	33.00 (838.2)
No Main Device			
1200 A ②	100	20.00 (508.0)	33.00 (838.2)

① Class "T" fuses only.
② Rating of horizontal cross bus.

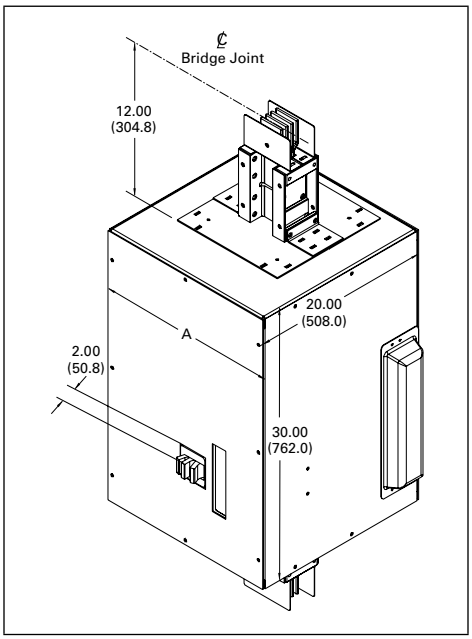

Figure 24.1-40. Main Breaker

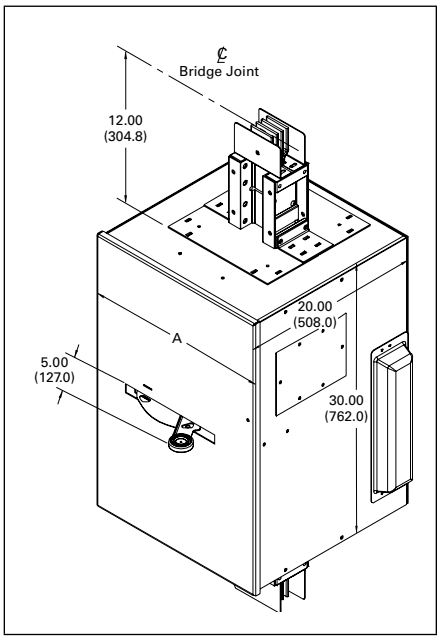

Figure 24.1-41. Main Fusible Switch

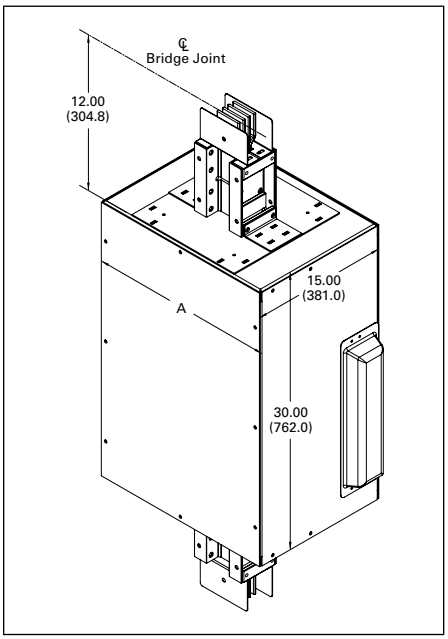

Figure 24.1-42. Unprotected PTO

Busway-Connected Panelboards

Pow-R-Way III busway-connected panelboards save space and installation time by eliminating the need to install a bus plug and cable over to a panelboard. This special enclosure plugs directly on to vertical busway and accepts Eaton PRL1a, PRL2a and PRL3a main circuit breaker panelboard interiors. The enclosure also accepts 28.00-inch wide standard and EZ trims. The panels can be top or bottom fed, and can mount on either side of the busway. Each panel is UL 857 listed.

Note: These panels are not seismic rated.

Busway-connected panelboards are sold and shipped through the Eaton regional satellite plants and coordinated with the Eaton busway plant in Greenwood, SC. See **Figure 24.1-43**.

Panelboard Spring Hangers

This specialized spring hanger shown in **Figure 24.1-44** allows the panel to be anchored and supported directly to a wall, and uniquely allows the panel to float with the riser busway. Panelboard spring hangers are sold separately as a busway accessory. Hardware is included to mount the spring hangers to the panelboard enclosure.

Table 24.1-37. Panelboard Enclosure Detail

MCB Frame	Maximum Box Size	MCB Height	Busway Joint Height	Box Height Off Floor	Minimum Floor-Ceiling Height Dimension in Inches (mm)
	Dimension in Inches (mm)				
	A	B	C	D	
PRL1a & 2a Main Circuit Breaker					
F	40.00 (1016.0)	72.00 (1828.8)	23.00 (584.2)	47.00 (1193.8)	103.00 (2616.2)
F	52.00 (1320.8)	72.00 (1828.8)	23.00 (584.2)	35.00 (889.0)	103.00 (2616.2)
F	64.00 (1625.6)	72.00 (1828.8)	23.00 (584.2)	23.00 (584.2)	103.00 (2616.2)
J	76.00 (1930.4)	72.00 (1828.8)	33.00 (838.2)	21.00 (533.4)	113.00 (2870.2)
K (500)	94.00 (2387.6)	74.00 (1879.6)	34.00 (863.6)	4.00 (101.6)	114.00 (2895.6)
K (750)	94.00 (2387.6)	72.00 (1828.8)	36.00 (914.4)	6.00 (152.4)	116.00 (2946.4)
PRL3a Main Circuit Breaker					
F (4/0)	76.00 (1930.4)	72.00 (1828.8)	23.00 (584.2)	11.00 (279.4)	103.00 (2616.2)
FCL	76.00 (1930.4)	72.00 (1828.8)	23.00 (584.2)	11.00 (279.4)	103.00 (2616.2)
FB	76.00 (1930.4)	72.00 (1828.8)	23.00 (584.2)	11.00 (279.4)	103.00 (2616.2)
J	76.00 (1930.4)	72.00 (1828.8)	23.00 (584.2)	11.00 (279.4)	103.00 (2616.2)
K (500)	94.00 (2387.6)	74.00 (1879.6)	34.00 (863.6)	4.00 (101.6)	114.00 (2895.6)
K (750)	94.00 (2387.6)	72.00 (1828.8)	36.00 (914.4)	6.00 (152.4)	116.00 (2946.4)
L	94.00 (2387.6)	72.00 (1828.8)	34.00 (863.6)	4.00 (101.6)	114.00 (2895.6)
LCL	94.00 (2387.6)	72.00 (1828.8)	38.00 (965.2)	8.00 (203.2)	118.00 (2997.2)
LA	94.00 (2387.6)	72.00 (1828.8)	34.00 (863.6)	4.00 (101.6)	114.00 (2895.6)
LG	94.00 (2387.6)	72.00 (1828.8)	36.00 (914.4)	6.00 (152.4)	116.00 (2946.4)

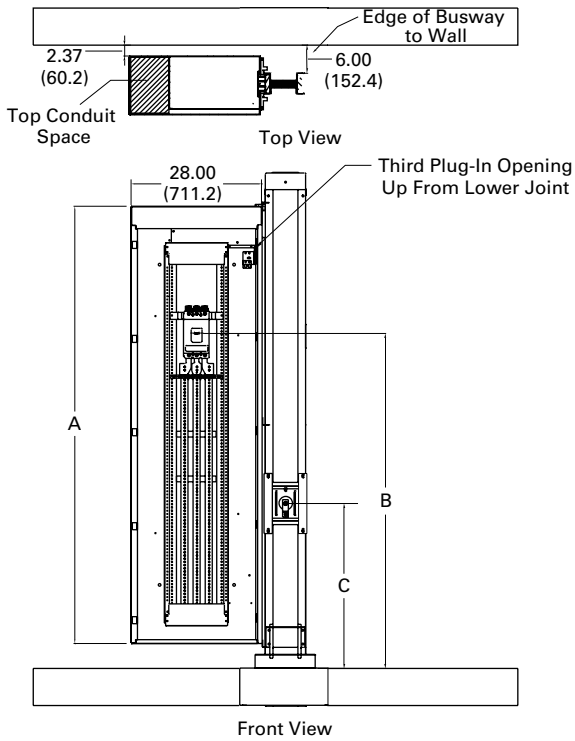

Note: Typical wall/floor flange detail, two bar per phase (wall opening should be 2 inches wider than bus on all sides).

Figure 24.1-43. Busway-Connected Panelboard Detail

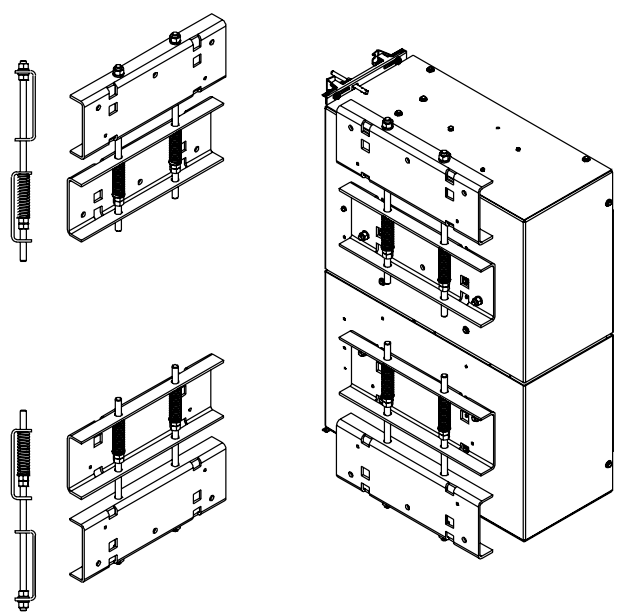

Figure 24.1-44. Panelboard Spring Hangers

Pow-R-Way III Adapters

See Figure 24.1-45

A complete line of adapters are available to enable the user to add to existing old-line Westinghouse or obsolete bus runs with the Pow-R-Way III design. The specific Westinghouse product lines are Low Impedance Busway, Current Limiting Busway, Pow-R-Way and Pow-R-Way II. The obsolete designs are CP2, CP3 and CP4 Safetybus. See **Table 24.1-38**.

The adapters allow the incorporation of present day technologies, available in Pow-R-Way III plug-in units, into existing busway systems. State-of-the-art features such as energy monitoring, transient voltage surge suppression and coordination/communication capabilities can all be added to existing distribution systems without having to upgrade and replace entire runs of busway. See **Table 24.1-38**.

Special adapters to competitive busway products are also available. Please contact the Greenwood factory for information.

Table 24.1-38. Available Pow-R-Way III Adapters

Busway Types	Brand	Minimum Adapter Length in Inches (mm)
Low impedance busway	Westinghouse	60.00 (1524.0)
Low impedance plug-in busway	Westinghouse	60.00 (1524.0)
Pow-R-Way busway	Westinghouse/ Cutler-Hammer	36.00 (914.4)
Pow-R-Way II busway	Westinghouse/ Cutler-Hammer	36.00 (914.4)
CP2 Safetybus	Cutler-Hammer	36.00 (914.4)
CP3 Safetybus	Cutler-Hammer	36.00 (914.4)
CP4 Safetybus	Cutler-Hammer	36.00 (914.4)
Competitor (foreign) busway	Contact factory	36.00 (914.4)

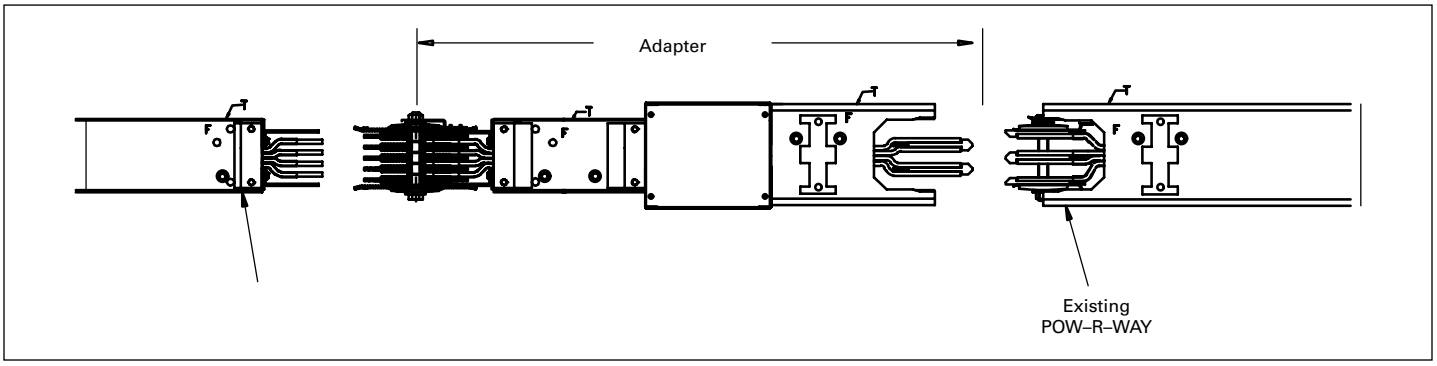

Figure 24.1-45. Pow-R-Way III to Pow-R-Way Adapter

Wall/Floor/Roof Flanges and End Closers

Wall/Floor Flanges

See Figure 24.1-46

Wall and floor flanges are used to fit around the busway and close off the opening made to allow the bus run to pass through a floor or wall. Wall and floor flanges are for cosmetic purposes only and do not provide any type of vapor or fire barrier.

Roof Flange

See Figure 24.1-47

A roof flange should always be used when outdoor busway penetrates a roof.

End Closers

See Figure 24.1-48

End closers terminate a bus run and can be used to close either the right or left end (see **Figure 24.1-2** on **Page 24.1-2** for wiring conductor configurations).

Table 24.1-39. End Closers

Ampere Rating			Dimensions (A) in Inches (mm)
UL 857		IEC 439	
Cu	Al	Cu	
225	225	225	5.13 (130.3)
400	400	400	5.13 (130.3)
600	—	630	5.13 (130.3)
800	600	1000	5.13 (130.3)
1000	—	1200	5.75 (146.1)
1200	800	1400	6.25 (158.8)
1350	1000	1550	6.75 (171.5)
1600	1200	1800	7.77 (197.4)
2000	1350	2250	9.02 (229.1)
—	1600	—	9.78 (248.4)
2500	2000	3000	11.55 (293.4)
3200	—	3800	16.52 (419.6)
4000	2500	4500	19.02 (482.9)
—	3200	—	20.54 (521.7)
5000	4000	5800	24.08 (611.6)

Table 24.1-40. Dimensions

Description	Dimensions (B) in Inches (mm)
3WH, 3WG, 3WHG, 3WI, 4WH, 4WG, 4WHG, 4WI	5.00 (127.0)
4WNH, 4WNG, 4WNI, 4WNHG	5.50 (139.7)

Note: End closer extends 0.44 inches (11.2 mm) beyond the centerline of the removed Pow-R-Bridge.

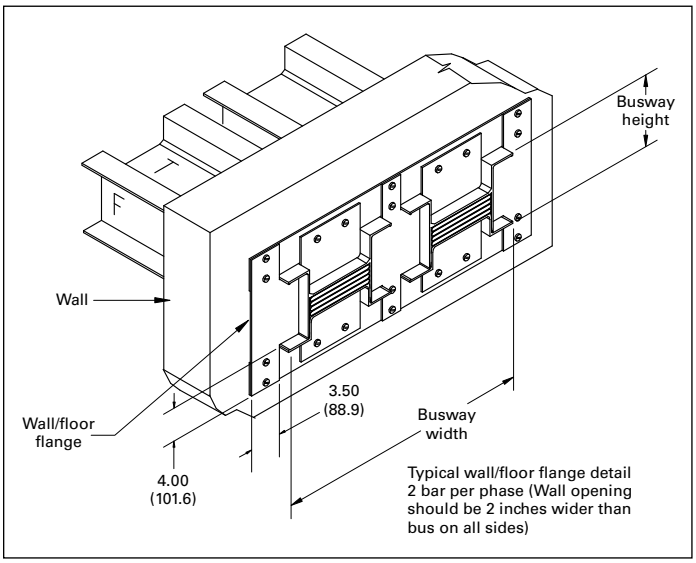

Figure 24.1-46. Wall/Floor Flange

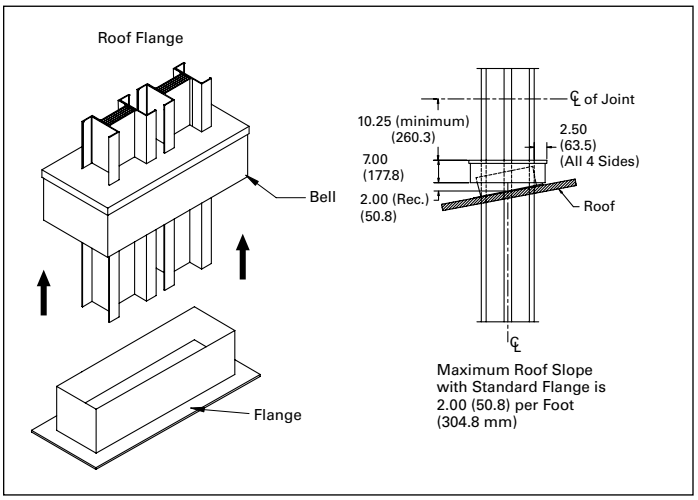

Figure 24.1-47. Roof Flange

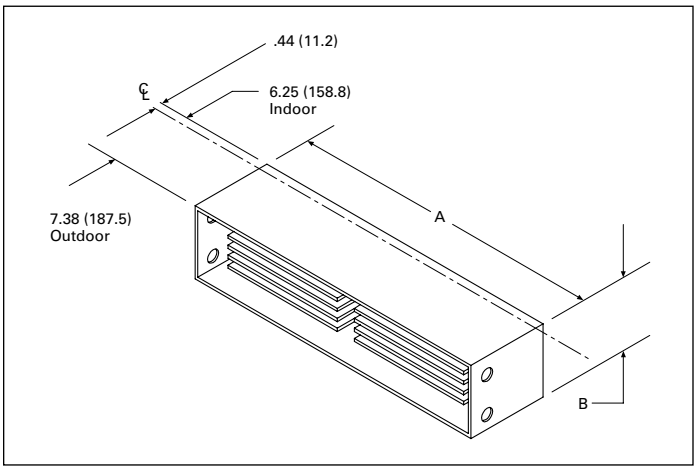

Figure 24.1-48. End Closer with Pow-R-Bridge Removed

Hangers

Sway brace

Sway brace brackets provide a provision to brace the busway run at a 45-degree angle, restricting the suspended busway from swinging. Sway braces can be ordered as part number BVC1102G01 regardless of height of busway dimension "A".

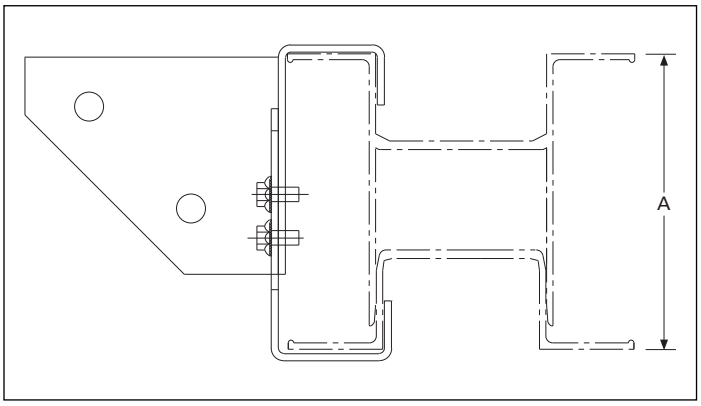

Figure 24.1-49. Sway Brace

Horizontal Hangers

One hanger is provided for every 10 feet (3.0 m) of horizontally mounted busway. The type of hanger supplied is determined by the specific mounting requirements of the busway. (For hook hangers and angle hangers, see **Figure 24.1-50** and **Figure 24.1-51**.)

Drop rods 1/2-inch (12.7 mm) diameter are not included and must be furnished by the installer. Drop rods 3/4-inch (19.1 mm) diameter are required for seismic applications.

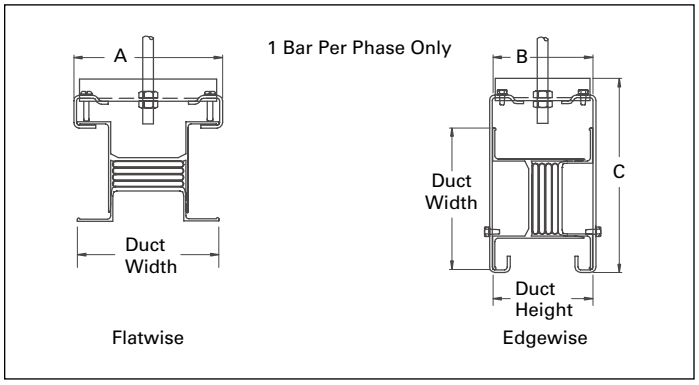

Figure 24.1-50. Hook Hangers—Non-Seismic Only

Table 24.1-41. Flatwise Hook Hanger

Ampere Rating			Dimension in Inches (mm)		
UL 857		IEC 439	Duct Width	(A)	(B)
Cu	Al	Cu			
225 400 600	225 400 —	225 400 630	4.75 (120.7) 4.75 (120.7) 4.75 (120.7)	5.12 (130.0) 5.12 (130.0) 5.12 (130.0)	4.75 (120.7) 4.75 (120.7) 4.75 (120.7)
800 1000 1200	600 — 800	1000 1200 1400	4.75 (120.7) 5.38 (136.7) 5.88 (149.4)	5.12 (130.0) 5.75 (146.1) 6.25 (158.8)	4.75 (120.7) 4.75 (120.7) 4.75 (120.7)
1350 1600 2000	1000 1200 1350	1550 1800 2250	6.38 (162.1) 7.38 (187.5) 8.64 (219.5)	6.75 (171.5) 7.75 (196.9) 9.03 (229.4)	4.75 (120.7) 4.75 (120.7) 4.75 (120.7)
— 2500	1600 2000	— 3000	9.40 (238.8) 11.17 (283.7)	9.78 (248.4) 11.58 (294.1)	4.75 (120.7) 4.75 (120.7)

Table 24.1-42. Edgewise Hook Hanger

Conductor Configuration	Dimension in Inches (mm)			
	Duct Height	Duct Width	(C)	(B)
3WH/4WH/3WG/3WHG/4WG/4WHG 3WI/4WI	4.38–4.56 (111.2–115.8) 4.38–4.56 (111.2–115.8)	4.75–6.38 (120.7–162.1) 7.38–11.17 (187.4–283.7)	8.40 (213.3) 13.19 (335.0)	5.06 (128.5) 5.06 (128.5)
4WNH/4WNG 4WNHG/4WNI	4.92–5.10 (125.0–129.5) 4.92–5.10 (125.0–129.5)	4.75–6.38 (120.7–162.1) 7.38–11.17 (187.4–283.7)	8.40 (213.3) 13.19 (335.0)	5.59 (141.9) 5.59 (141.9)

Table 24.1-43. Flatwise Angle/Trapeze Hanger

Ampere Rating			Conductor	Dimension in Inches (mm)	
UL 857		IEC 439	Bars Per Phase	Busway Width	(A)
Cu	Al	Cu			
225	225	225	1	4.75 (120.7)	9.00 (228.6)
400	400	400	1	4.75 (120.7)	9.00 (228.6)
600	—	630	1	4.75 (120.7)	9.00 (228.6)
800	600	1000	1	4.75 (120.7)	9.00 (228.6)
1000	—	1200	1	5.38 (136.7)	9.63 (244.6)
1200	800	1400	1	5.88 (149.4)	10.12 (257.0)
1350	1000	1550	1	6.38 (162.1)	10.63 (270.0)
1600	1200	1800	1	7.38 (187.5)	11.63 (295.4)
2000	1350	2250	1	8.64 (219.5)	12.88 (327.2)
—	1600	—	1	9.40 (238.8)	13.62 (345.9)
2500	2000	3000	1	11.17 (283.7)	15.44 (392.2)
3200	—	3800	2	16.14 (410.0)	20.39 (517.9)
4000	2500	4500	2	18.64 (473.5)	22.88 (581.2)
—	3200	—	2	20.16 (512.1)	24.39 (619.5)
5000	4000	5800	2	23.70 (602.0)	28.00 (711.2)

Table 24.1-44. Edgewise Angle/Trapeze Hanger

Conductor Configuration	Dimension in Inches (mm)	
	Duct Height	(A)
3WH/4WH/3WG/3WHG/ 4WG/4WHG/3WI/4WI	4.38–4.56 (111.2–115.8)	9.00 (228.6)
4WNH/4WNG/4WNHG/4WNI	4.92–5.10 (125.0–129.5)	9.36 (237.7)

Note: Angle hangers must be used for seismic applications.

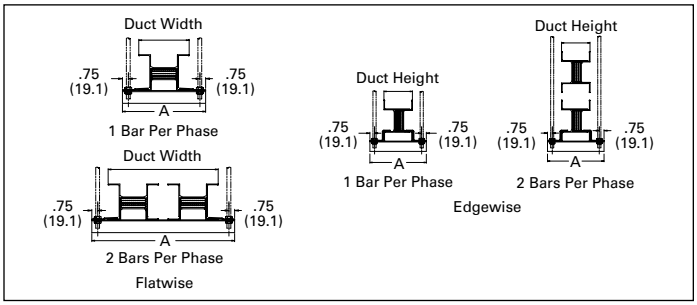

Figure 24.1-51. Angle/Trapeze Hangers

Vertical Hangers

See Figure 24.1-52 and Figure 24.1-53

When busway is to be installed vertically, a spring suspension type vertical hanger should be used. **Vertical hangers are not provided unless specified.**

This unique hanger equalizes the weight of vertically mounted busway along all supports. A vertical hanger must be used on each floor and at the end of the bus run on the last floor.

The maximum span permitted by UL on vertical hangers is 16 feet (4.9 m). Intermediate hangers are required for floor heights exceeding 16 feet (4.9 m).

Table 24.1-45. Edgewise Vertical Hangers (F and F-Opposite Sides)

Conductor Configuration	Busway Height	Hangers on "F" and "F" Opposite Sides	
	Inches (mm)	(A) Inches (mm)	Figure 24.1-53 Configuration
3WH/4WH	4.38 (111.3)	4.72 (119.9)	A
3WG/3WHG/ 4WG/4WHG	4.50 (114.3)	4.91 (124.7)	A
3WI/4WI	4.56 (115.8)	4.91 (124.7)	A
4WHN	4.92 (125.0)	5.25 (133.4)	A
4WNG/4WNHG	5.05 (128.3)	5.44 (138.2)	A
4WNI	5.10 (129.6)	5.44 (138.2)	A

Table 24.1-46. Flatwise Vertical Hangers (T and T-Opposite Sides)

Ampere Rating			Busway Width	Hangers on "T" and "T" Opposite Sides	
UL 857		IEC 439			
Cu	Al	Cu	Inches (mm)	(A) Inches (mm)	Figure 24.1-53 Configuration
225	225	225	4.75 (120.7)	4.62 (117.3)	B
400	400	400	4.75 (120.7)	4.62 (117.3)	B
600	—	630	4.75 (120.7)	4.62 (117.3)	B
800	600	1000	4.75 (120.7)	4.62 (117.3)	B
1000	—	1200	5.38 (136.7)	5.25 (133.4)	B
1200	800	1400	5.88 (149.4)	5.75 (146.1)	B
1350	1000	1550	6.38 (162.1)	6.25 (158.8)	B
1600	1200	1800	7.38 (187.5)	7.25 (184.2)	B
2000	1350	2250	8.64 (219.5)	8.50 (215.9)	B
—	1600	—	9.40 (238.8)	9.25 (235.0)	C
2500	2000	3000	11.17 (283.7)	11.06 (280.9)	C
3200	—	3800	16.14 (410.0)	16.00 (406.4)	D
4000	2500	4500	18.64 (473.5)	18.50 (469.9)	D
—	3200	—	20.16 (512.1)	20.06 (510.0)	D
5000	4000	5800	23.70 (602.0)	23.59 (600.0)	D

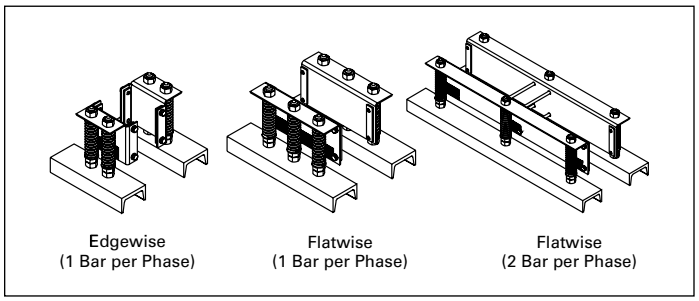

Figure 24.1-52. Typical Installation

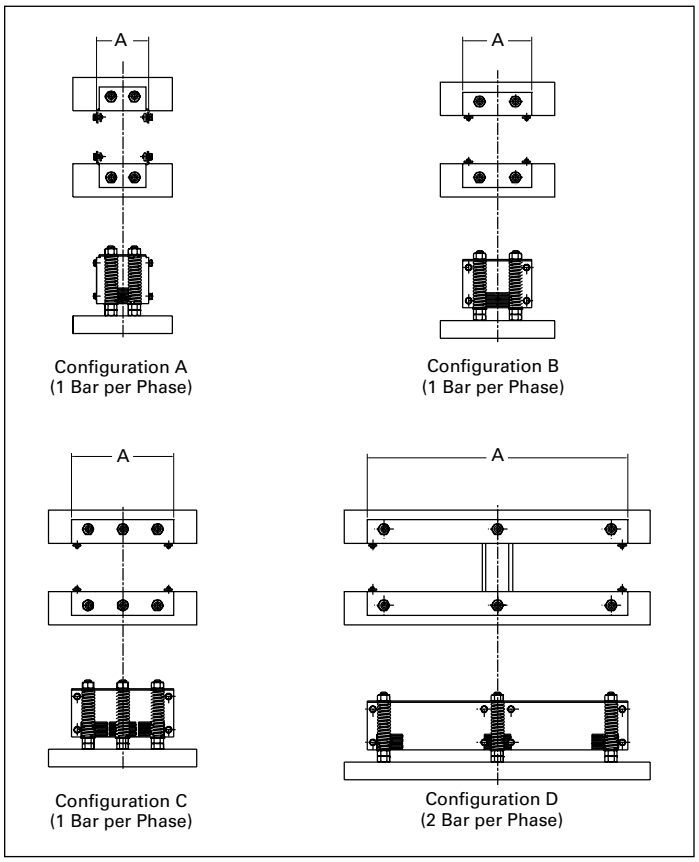

Figure 24.1-53. Vertical Hangers

Plug-In Protective Devices

All Pow-R-Way III plug-in units are designed with the safety of the installer and user as the key criteria. The following features are standard for both fusible and circuit breaker type plug-in units:

Pow-R-Way III bus plugs have extended ground and neutral bars which bring the termination points down into the cable entry area making for a safer, easier connection.

A barrier is provided over the line side connections from the bus plug stab assembly to the fusible switch or circuit breaker.

The bus plug ground stab makes positive contact with the busway ground (integral or internal) before the phase or neutral stabs contact the bus bars.

A bus plug guide port is provided in the busway housing, to the right of each plug-in outlet. A polarizing alignment pin is located at the line side end of each bus plug enclosure. The alignment pin must be inserted into the guide port for proper installation. The plug-in unit and the busway are interlocked to ensure that the device is in the OFF position prior to installation or removal of the unit.

To ensure that the bus plug is seated onto the busway, the clamping mechanism will draw the unit tight onto the busway housing as the installer tightens the clamps.

Plug-in units have an interference bracket that prevents the cover from being opened while the device is in the ON position and to prevent accidental closing of the device while the cover is open.

There are two locations available for field positioning of the bus plug operating handle for all circuit breaker bus plugs and fusible bus plugs rated 400 A or higher. On vertical bus run applications, the handle can be mounted on the side of the plug, and for horizontal runs, the handle can be mounted on the (line side) end of the unit. Bus plugs are shipped with the handle mounted on the end as standard. Mounting positions are illustrated in **Figure 24.1-56**.

When a plug-in unit is installed, the bus plug stab base assembly engages a seating ridge provided on the plug-in outlet. The stab base is drawn in to overlap the ridge and form a tight seal against moisture and dust.

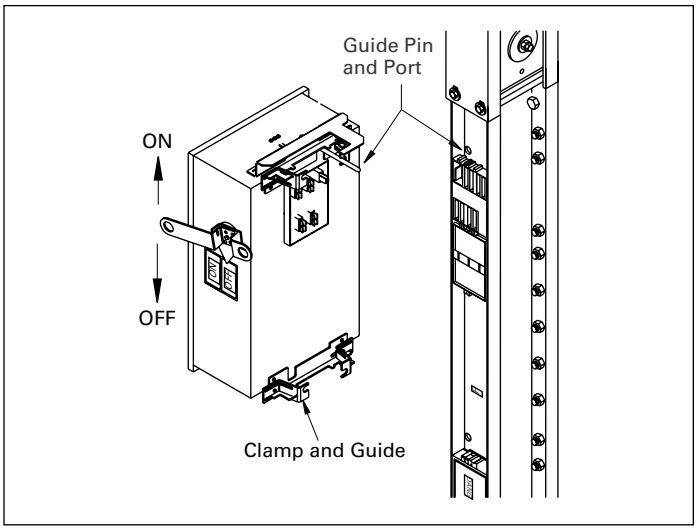

Figure 24.1-54. Plug-In Stab Details

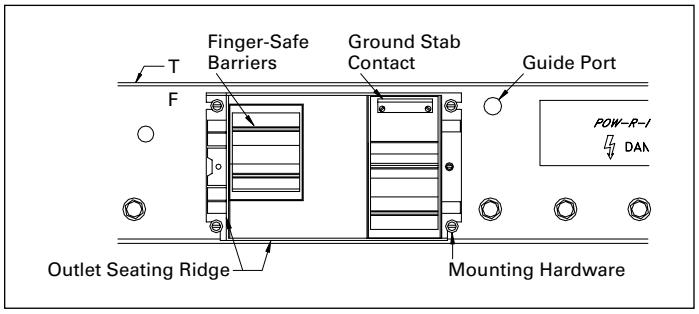

Figure 24.1-55. Plug-In Outlet Details

Plug-In Device Mounting

The load end of a plug-in unit varies with the orientation of the busway as determined by the "F" and "T" markings (see **Figure 24.1-56** below).

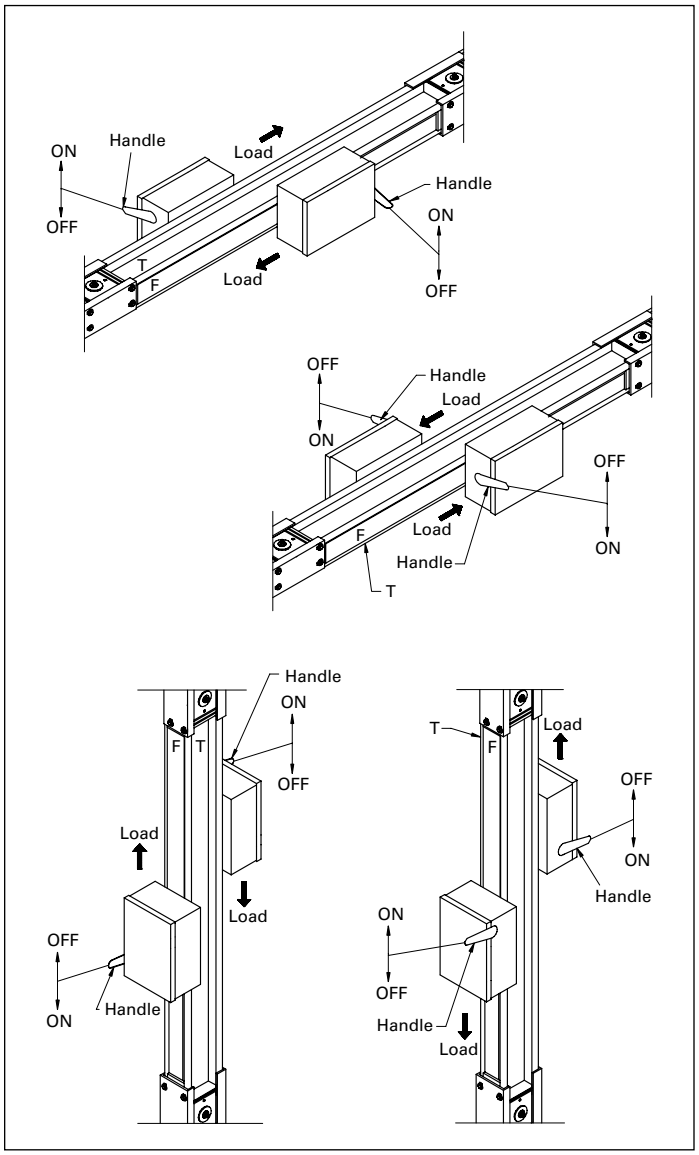

Figure 24.1-56. Plug-In Device Mounting

Plug-In Device Mounting (Continued)

Plug-in openings are spaced every 24.00 inches (609.9 mm) starting 12.00 inches (304.8 mm) in from the centerline of each bridge joint with a maximum of five openings per side of an individual section of busway. **Figure 24.1-57** and **Figure 24.1-58** illustrate the number of plug-in openings taken up by each style/size bus plug.

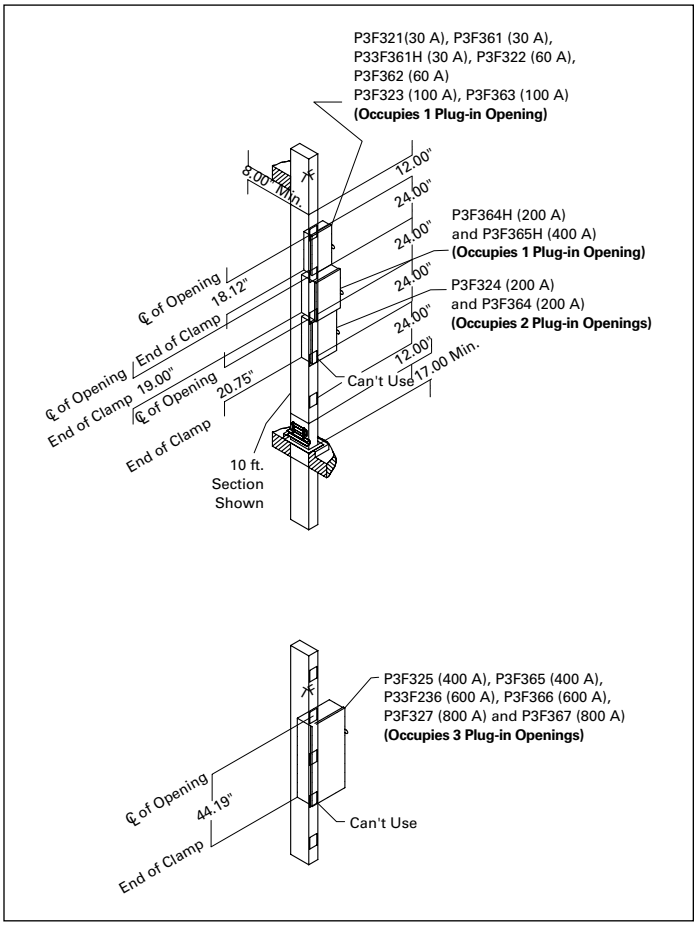

Figure 24.1-57. Fusible Plug-In Device Mounting

Each plug-in unit uses only one plug-in opening; however, may cover up additional plug-in openings preventing use.

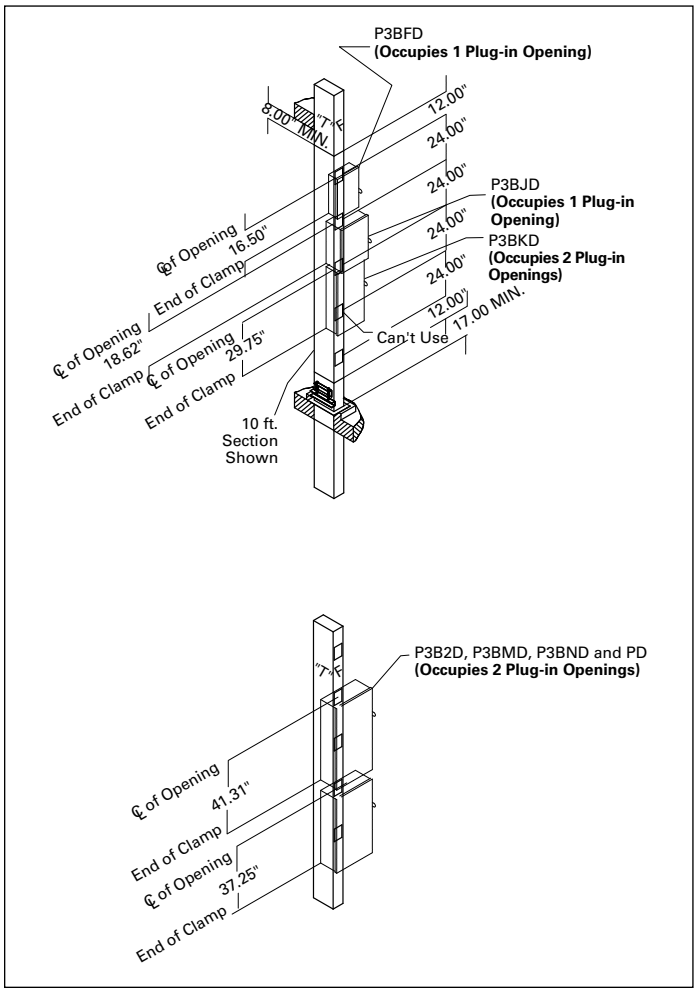

Figure 24.1-58. Breaker Plug-In Device Mounting

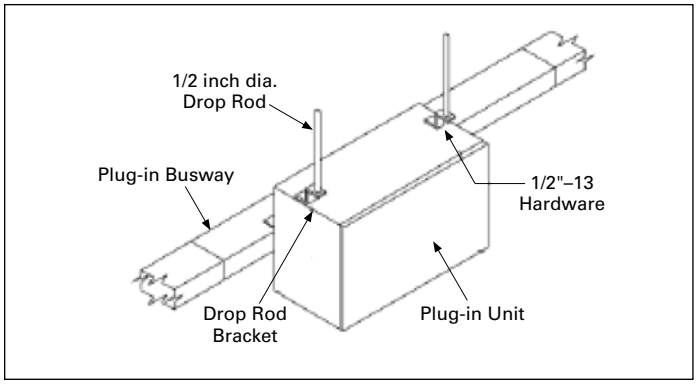

Figure 24.1-59. Horizontal Support Bus Plug

Surge Protective Device (SPD) Plug-In Devices

SPD Series

See Figure 24.1-60

The Pow-R-Way III plug-in device product offering includes a surge protective device (SPD), which is ideal for busway fed distribution systems. A transient voltage is a random, high energy, short duration electrical anomaly. These high energy surges can disrupt, damage or destroy sensitive microprocessor-based equipment. Eaton has developed the SPD family of products to ensure that quality power is supplied to commercial, industrial, medical and institutional facilities.

The SPD not only protects against externally created impulse transients such as lightning, utility capacitor switching and disturbances emitted by adjacent facilities, but also provides needed protection against internal transients. This type of transient is generated within a facility's own distribution system. Sources of internally generated, or ringwave, transients are imaging, equipment, variable frequency drives, lighting dimmers, arc welders, and the switching on and off of electrical distribution equipment. It is estimated that over 80% of surge disturbances are actually caused by internal transients.

The SPD series also filters repetitive electrical line noise (EMI/RFI), which is defined as any unwanted electrical signal that produces undesirable effects in the circuits of sensitive electronic equipment or disturbances that are two times peak voltage. The suppression of AC transients is accomplished through the use of Metal Oxide Varistors (MOVs) that provide a low impedance path to divert surges away from loads. Electrical line noise and ringing transients are eliminated by adding filtering capacitors to the suppression device.

Not all SPD units on the market have filtering capabilities. The benefits of combining SPD and filtering are reduced MOV stress resulting in a longer life cycle, lower let-through voltage, better noise attenuation levels and increased reliability.

Without protection devices, electronic based loads and microprocessors are not provided with the noise- and disturbance-free power that they require. Because microprocessors are now common in most facilities, specifiers must ensure that the AC power supply is properly filtered. Significant performance advantages are achieved by integrating SPD filters into busway systems.

Because the SPD unit is directly connected to the busway, it is able to minimize let-through voltage and isolate critical loads that are fed from a protected busway run. Due to the integrated design, the SPD bus plug saves the user-needed wall space and greatly reduces the installed project cost. The SPD bus plug is furnished with a breaker disconnect. For catalog numbers and selection criteria, see **Table 24.1-47** below.

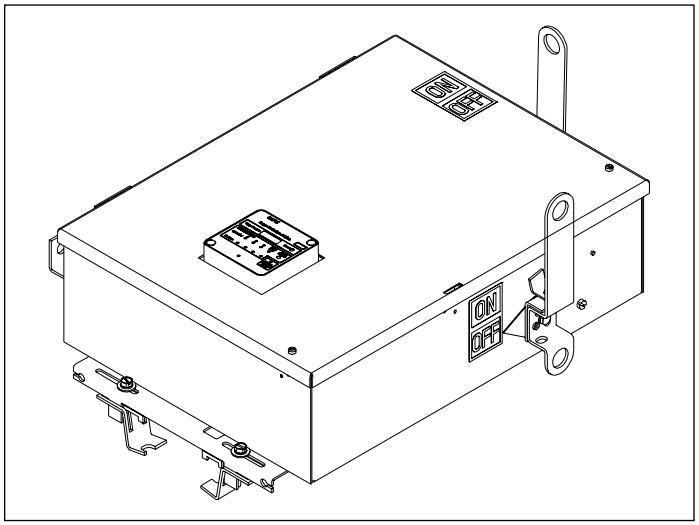

Figure 24.1-60. SPD Bus Plug

Table 24.1-47. SPD Bus Plugs Selection Chart

P3BSPD 250 480Y S C

P3BSPD = SPD unit with Series C breaker
P3BPDGSPD = SPD unit with Power Defense breaker

Surge Rating (kA/Phase)	
100	**200**
120	**250**
160	**300**

Voltage Code	Voltage Requirements			
4W	120/208	230/400	277/480	347/600
3W	240 V	400 V	480 V	600 V
Three-phase wye (four-wire + ground)	208Y	400Y	480Y	600Y
Three-phase delta (three-wire + ground)	240D	—	480D	600D

Fixed—Do Not Change

Option Code

1 = Basic—Dual-colored LED per phase to indicate protection status of the N-G mode on units with a neutral wire, single-colored LED to indicate the lack of a neutral wire connection on systems with a neutral wire.

S = Standard—Dual-colored LED per phase to indicate protection status of the N-G mode on units with a neutral wire, single-colored LED to indicate the lack of a neutral wire connection on systems with a neutral wire, audible alarm with silence button, and Form C relay contact.

N = Standard + Surge Counter—Dual-colored LED per phase to indicate protection status of the N-G mode on units with a neutral wire, single-colored LED to indicate the lack of a neutral wire connection on systems with a neutral wire, audible alarm with silence button, Form C relay contact, EMI/RFI filtering providing up to 50 dB of noise attenuation from 10 kHz to 100 MHz, and surge counter with reset button.

Note: Available for Pow-R-Way III plugs. This information is required for all quotations. This information should also be included at order entry to ensure prompt processing of the order.

Ground Detector/Neutralizer Bus Plug

See Figure 24.1-61

In rare cases, bus bars in a busway system pick up static electricity. In order to discharge this potential, a neutralizer and ground detector bus plug is available. The unit has three 18,000 ohm resistors connected between the bus bars and the ground. Static electricity is discharged through these resistors. A neon lamp is wired in series with the bus bar and part of the resistor, and burns continuously. If there is a ground anywhere on the system of a lower resistance than the path through the lamp, the lamp will go out, indicating that there is a short in the system.

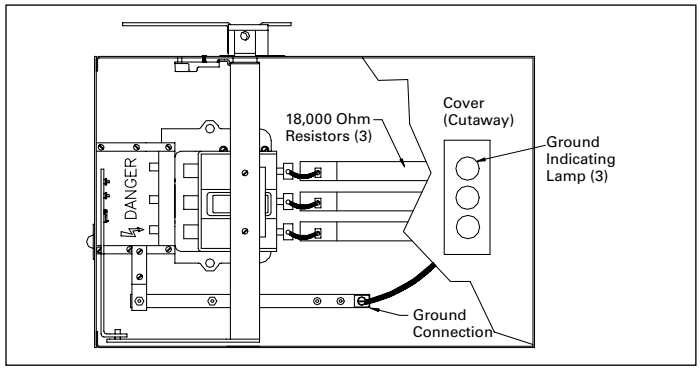

Figure 24.1-61. Ground Detector/Neutralizer Bus Plug

Combination Starter Bus Plugs

See Figure 24.1-62

Eaton's Freedom™ and Advantage™ motor starters are included in the Pow-R-Way III bus plug product offering. Freedom Motor Starters offer state-of-the-art features that ensure greater value, flexibility and performance in the toughest commercial and industrial applications.

Advantage motor starters have features including a solid-state, heaterless overload relay with built-in ground fault protection. Advantage also features communication capabilities and an on-board microprocessor that controls the contactor magnet to eliminate burnout in low voltage or varying control circuit conditions.

Plug-in combination starters or contactors are mounted in enclosures identical to the circuit breaker and fusible switch type bus plugs including the clamp and guides, safety interlocks and guide pin. They are available from size 0 through 5 with a circuit breaker, motor circuit protector or fusible disconnect. Contact Eaton for specific application and outline dimensions.

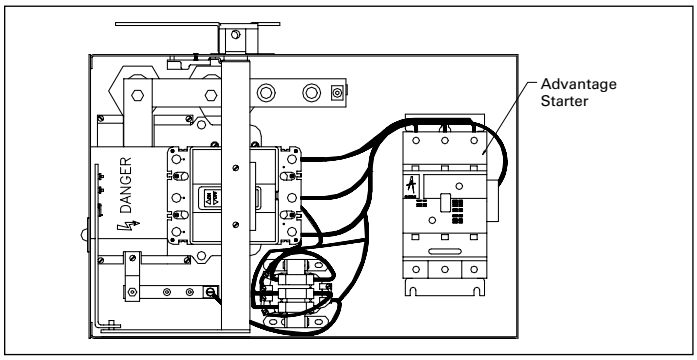

Figure 24.1-62. Freedom/Advantage Bus Plug

Digitrip OPTIM™ Bus Plugs

See Figure 24.1-63

Digitrip OPTIM is a new programmable, communicating, microprocessor-based electronic trip unit system for Eaton's Series C circuit breakers. OPTIM is available for Pow-R-Way III bus plugs on K-Frame (125–400 A), L-Frame (70–600 A) and N-Frame (400–1200 A) circuit breakers. Digitrip OPTIM provides an electrical distribution system with superior programmable protection, coordination and a state-of-the-art advanced warning capability along with system diagnostics, monitoring and communications. Digitrip OPTIM is available in two trip unit types: OPTIM 550 and OPTIM 1050.

Unique Digitrip OPTIM features can provide: **Time current settings** with more increments that permit the user to optimize system protection and coordination, **improved accuracy** gives more selectivity and closer sensitivity in providing coordination, **programmable** short delay and/or instantaneous curve tripping options, **selectable** thermal memory, as well as **selectable sure start discriminator** protection features. Increased **system security** is provided by the addition of a programmable password protection. For improved system coordination, **I^4t long delay** time slope has been added to the traditional nine LSIG curve shaping options. **Short delay and ground delay zone selective interlocking** have also been added, down to a 70 A circuit breaker.

The following Advance Warning options are also available: A programmable high load phase and neutral alarm, adjustable between 50% and 100% of Ir (LDPU setting), will signal an impending trip condition. An adjustable ground fault alarm that will alert the user of a ground fault condition without the breaker. Energy alarming can be performed (such as peak demand exceeded) to reduce energy costs with OPTIM 1050 via PowerNet. Total Harmonic Distortion (THD) alarming detects changes in power quality with OPTIM 1050 via PowerNet.

Digitrip OPTIM provides a complete selection of system diagnostic capabilities including: **four cause-of-trip LEDs** are mounted on the front of the trip unit to improve troubleshooting capabilities. They are complemented by trip event information that is stored in memory after a trip condition, **remote breaker status indication** is provided by auxiliary and alarm switches. The Breaker Interface Module (BIM) provides trip indication information on the front of the unit or via relay contacts to a remote location.

Digitrip OPTIM has an extensive menu of monitoring capabilities including load monitoring, power factor (OPTIM 1050), power and energy (OPTIM 1050) power quality-current harmonics.

OPTIM trip units are PowerNet compatible and can be included in the unique tripping PowerNet communications system. Contact Eaton for specific applications and outline dimensions.

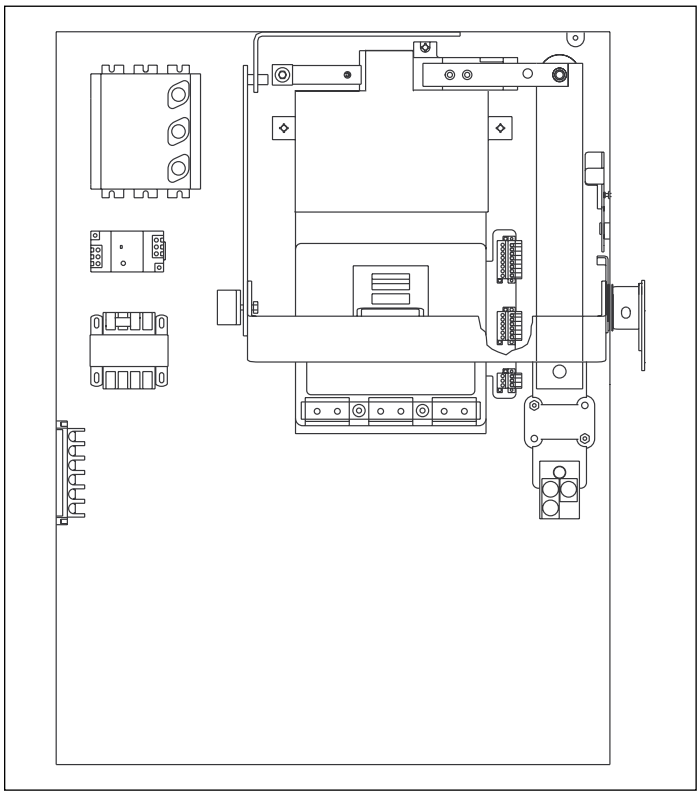

Figure 24.1-63. OPTIM Bus Plug

Power Takeoffs

Power takeoff sections are used to tap up to 1200 A of power off of the busway. A power takeoff section must be used when power in excess of the current carrying capabilities of the plug-in stabs (800 A) is required. A bolt-on fusible switch or circuit breaker unit can then be bolted to the power takeoff.

Bridge Joint Power Takeoff

See Figure 24.1-64

A bridge joint power takeoff is a special connection that allows for the attachment of a bolt-on unit at the bridge joint. The bridge joint power takeoff and a bolt-on unit can be used to tap off power where plug-in busway is not available.

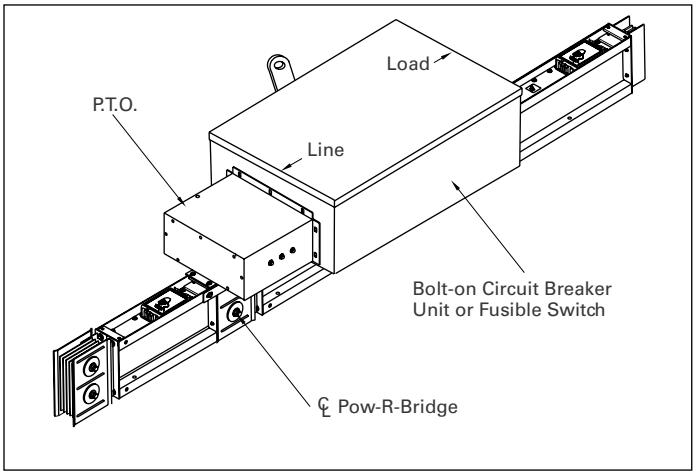

Figure 24.1-64. Bridge Power Takeoff

Built-In Power Takeoff

See Figure 24.1-65

A built-in power takeoff is a special piece of feeder busway that allows for the attachment of a bolt-on unit. Built-in power takeoffs are used where space restrictions dictate that the wide dimensions of the busway be flat against the wall, ceiling or other obstruction. In this application, power takeoffs and bolt-on units are used instead of plug-in units.

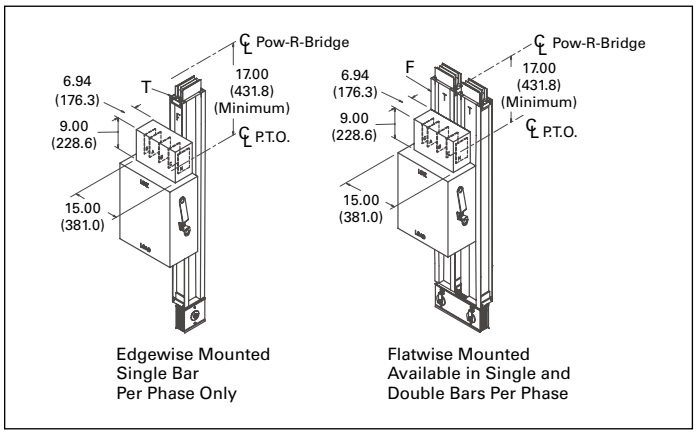

Figure 24.1-65. Built-In Power Takeoff

Plug-In Cable Tap Boxes

See Figure 24.1-66

Plug-in cable tap boxes are used to feed the busway run, or where equipment served by the busway is connected without overcurrent protection. Plug-in cable tap boxes plug into any Pow-R-Way III busway (225–5000 A) plug in opening.

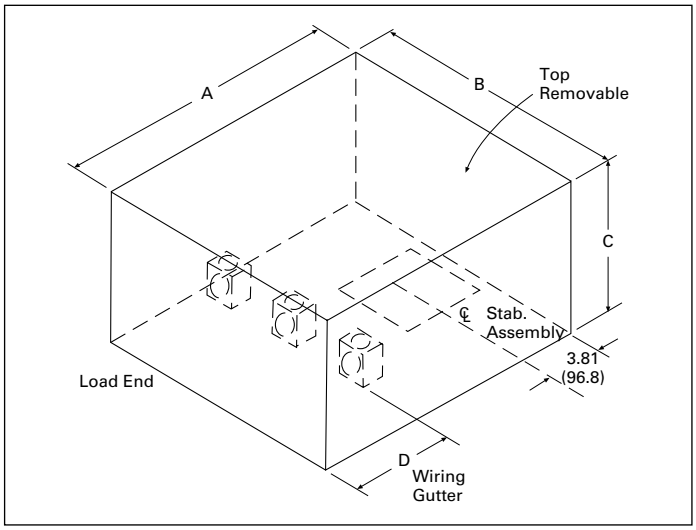

Figure 24.1-66. Plug-In Cable Tap Box

Table 24.1-48. Plug-In Cable Tap Box Details

Ampere Rating	Dimension				Compression Conn./Phase and N		Mechanical Lugs/Phase and N		Catalog Number
	(A)	(B)	(C)	(D)					
	Inches (mm)	Inches (mm)	Inches (mm)	Inches (mm)	English	Metric	English	Metric	
200	19.50 (495.3)	15.50 (393.7)	7.12 (180.8)	7.50 (190.5)	(1)	(1)	—	—	**P3PTB200C**
200	19.50 (495.3)	15.50 (393.7)	7.12 (180.8)	7.50 (190.5)	—	—	(1) #4–350 kcmil	(1) 21.2–177 mm²	**P3PTB200M**
400	26.25 (666.7)	21.00 (533.4)	10.00 (254.0)	7.50 (190.5)	(1)	(1)	—	—	**P3PTB400C**
400	26.25 (666.7)	21.00 (533.4)	10.00 (254.0)	7.50 (190.5)	—	—	(1) 250–750 kcmil or (2) 3/0–250 kcmil	(1) 127–380 mm² or (2) 85.0–127 mm²	**P3PTB400M**
600	30.00 (762.0)	24.75 (628.6)	10.50 (266.7)	12.80 (325.1)	(2)	(2)	—	—	**P3PTB600C**
600	30.00 (762.0)	24.75 (628.6)	10.50 (266.7)	12.80 (325.1)	—	—	(2) 250–750 kcmil or (4) 3/0–250 kcmil	(1) 127–380 mm² or (4) 85.0–127 mm²	**P3PTB600M**
800	30.00 (762.0)	24.75 (628.6)	10.50 (266.7)	12.80 (325.1)	(3)	(3)	—	—	**P3PTB800C**
800	30.00 (762.0)	24.75 (628.6)	10.50 (266.7)	12.80 (325.1)	—	—	(3) 250–750 kcmil or (6) 3/0–250 kcmil	(3) 127–380 mm² or (6) 85.0–127 mm²	**P3PTB800M**

Receptacle Plug-In Devices

Receptacle Plug-In Units

Eaton's unique receptacle plug-in unit design makes them the most flexible receptacle units in the industry. Pow-R-Way III receptacle plug-in units come fully assembled and wired, reducing installation time, and are built to order.They are CSA and UL 857 listed and come in five different configurations.

Fused Duplex Receptacle Unit

The fused duplex receptacle plug-in unit allows for quick standard receptacle power at any plug-in location along the busway. Each unit comes with either two NEMA 5-20R duplex receptacles (catalog number: P3FD62FD62F) or two NEMA L5-15R duplex receptacles (catalog number: P3FD61FD61F). Each duplex receptacle is rated and fuse protected at 15 or 20 A and is 120 V, single-phase, three-wire.

Single Receptacle Unit

The single receptacle plug-in unit, shown in **Figure 24.1-67**, is configured to order and usesType CH single- or two-pole plug-in circuit breakers. One receptacle comes with each unit that can be straight blade or twist-lock, rated from 15–50 A. Each receptacle can also be fixed mounted to the front of the enclosure or cord mounted from the bottom of the enclosure (not as shown). Cord lengths are 1–15 feet in 1-foot increments. Consult NEC Sections 368, 400 and 645 for cord drop applications.

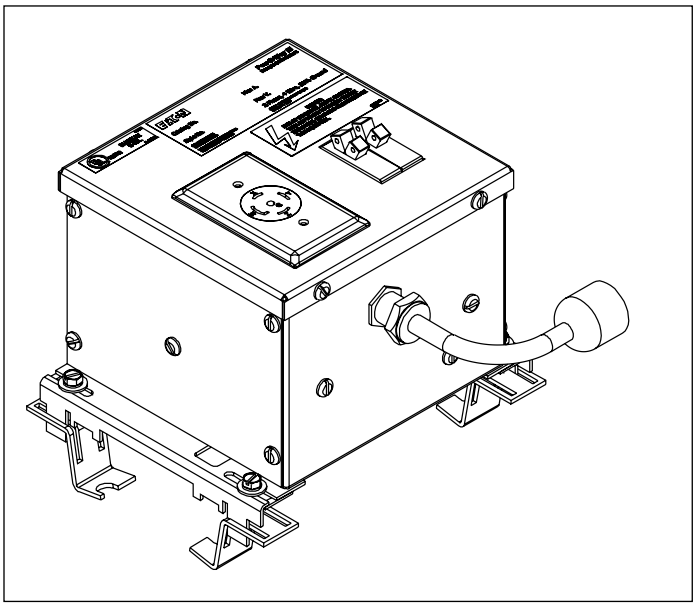

Figure 24.1-67. Single Receptacle Plug

Quad Receptacle Unit

The quad receptacle plug-in unit, shown in **Figure 24.1-68**, is configured to order and usesType CH single-, two- and three-pole plug-in circuit breakers. Each unit comes with 2–4 NEMA configured receptacles in any combination of straight blade and twist-lock and three-, four- and five-wire, rated 15–50 A. Each receptacle can be fixed mounted to the front of the enclosure or cord mounted from the bottom of the enclosure (not as shown). Cord lengths are 1–15 feet in 1-foot increments. Consult NEC Sections 368, 400 and 645 for cord drop applications.

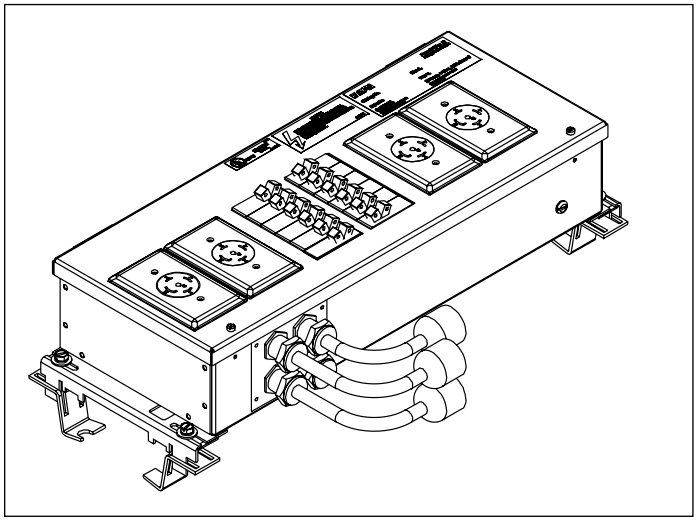

Figure 24.1-68. Quad Receptacle Plug

Construction Drawing

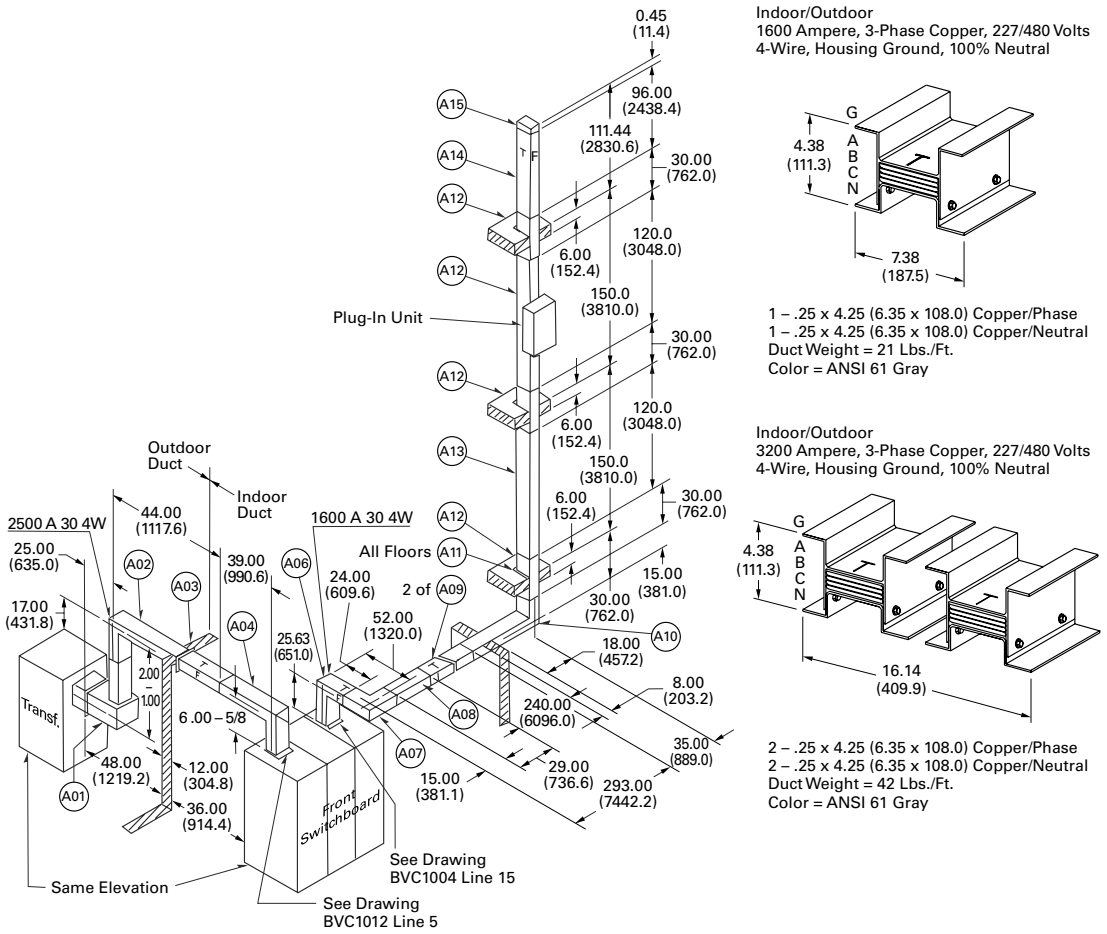

Item	Description	Style No. or S.O. No.	Req.
A01	XFMR Throat	LVB01234 – U01	1
A02	Elbow	LVB01234 – A02	1
A03	Wall Flange	BVC0299G11	1
A04	Elbow Flange	LVB01234 – A04	1
A05	Hanger	BVD0301G12	2
A06	Flange Elbow	LVB01234 – A06	1
A07	Elbow	LVB01234 – A07	1
A08	29.0 Inches (736.6 mm) Length	LVB01234 – A08	1
A09	120.0 Feet (3048.0mm) Length	LVB01234 – A09	2

Item	Description	Style No. or S.O. No.	Req.
A10	Elbow	LVB01234 – A10	1
A11	Floor Flange	BVD0299G06	3
A12	30 Inches (726.0mm) Length	LVB01234 – A12	3
A13	120.0 Feet (3048.0 mm) Length	LVB01234 – A13	2
A14	96.0 Feet (2438.4 mm) Length	LVB01234 – A14	1
A15	End Closer	BVD0156G08	1
A16	Hanger	BVD0300G12	3
A17	Hanger	BVD0300G15	4

Figure 24.1-69. Sample Installation Drawing

After the approval process and prior to shipment of the busway from the factory, the installer will receive a set of construction drawings. A sample is illustrated in **Figure 24.1-69** above. The drawings will contain a complete layout of the entire installation and a bill of material that includes:

1. The item number of each section which can be correlated with the drawing.
2. A description of each section.
3. The style number or shop order number of each section.
4. The quantity of each section or style number required.
5. The height, width and weight (per foot) of each ampere rating.
6. Location of the "T" and "F" markings on the busway.
7. Flange reference drawings.
8. Switchgear locations and orientation.
9. Wall and floor locations.
10. The length of each section.
11. The location of any sections that have been designated as "Field Fit" pieces (see **Page 24.1-43**).

The installer should review this drawing prior to and during the installation process. Please note that plug-in units are generally not shown on a construction drawing. The installer will also receive installation instruction leaflets and operation and maintenance manuals with the drawings.

Installation Data

Hoisting and Positioning Busway

Pow-R-Way III is manufactured with two sets of lifting eyes at the ends of each piece to facilitate the hoisting and positioning of the busway during installation. Refer to **Figure 24.1-70** for location of lifting eyes.

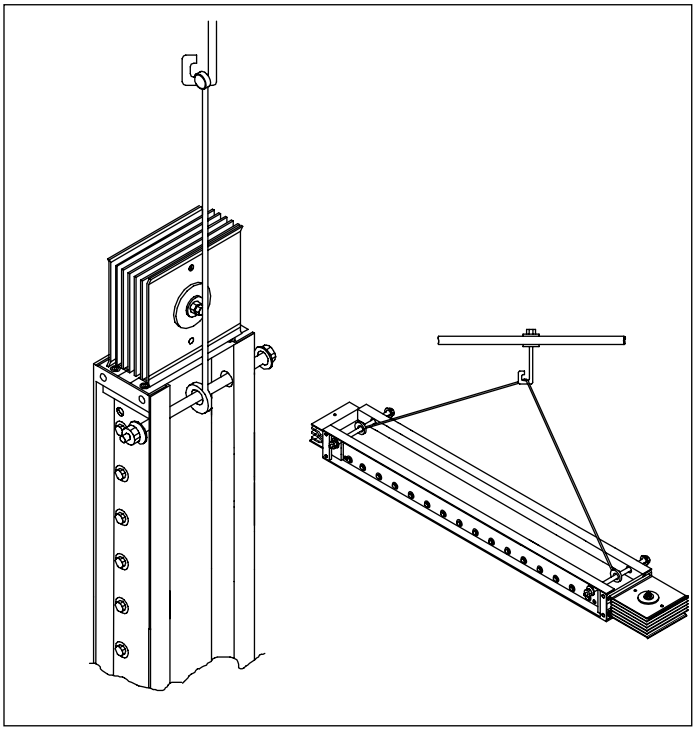

Figure 24.1-70. Hoisting Riser and Horizontal Busway

Busway Joint Assembly

When connecting sections of busway the following guidelines must be followed:

1. Carefully read NEMA publication BUI.1 provided with the busway before installing equipment.
2. Contact surfaces must be kept clean and free of all contaminants.
3. Align the (factory installed) Pow-R-Bridge end of the piece being positioned with the non-bridge joint end of the adjacent section. Confirm that the "T" and "F" labels of both sections are in the same plane. Failure to do so will result in an improper installation with the phase bars of the connected sections out of sequence. Then, slide the two sections together until the bus bars of the non-bridge section contact the stopping lances of the bridge joint conductor bars of the section being positioned.

Figure 24.1-71 illustrates examples of incorrect and correct connections. Obviously, the installation is incorrect if the bridge joint is missing, but the busway will also be improperly installed if the "T" label of the bridge joint is not in the same plane as the "T" label of the busway.

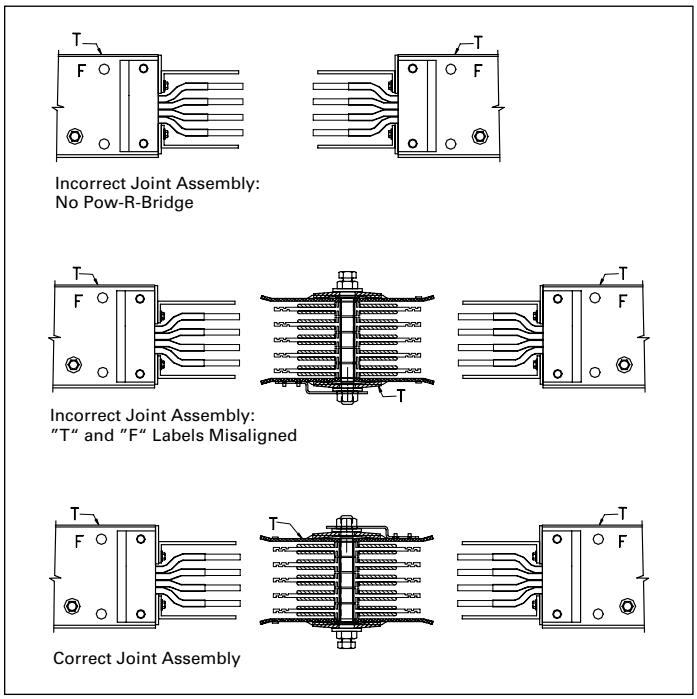

Figure 24.1-71. Bridge Joint Installation

Torque Indicating Bolt

See Figure 24.1-72

The torque indicating bolt is a double-headed bolt designed to ensure that proper installation torque is achieved. Fall-away instruction labels are provided between the upper and lower bolt heads. A standard wrench with a (minimum) 14.00-inch (355.6 mm) handle should be used to complete the joint installation. Torque should be applied to the upper head only and as when the proper value is achieved. This bolt head will shear off allowing the tag to fall to the floor. Any joint that is improperly torqued will retain the highly visible tag and should be retightened. The lower bolt head remains intact for future maintenance and a label is provided on the bridge joint with the proper torque requirements.

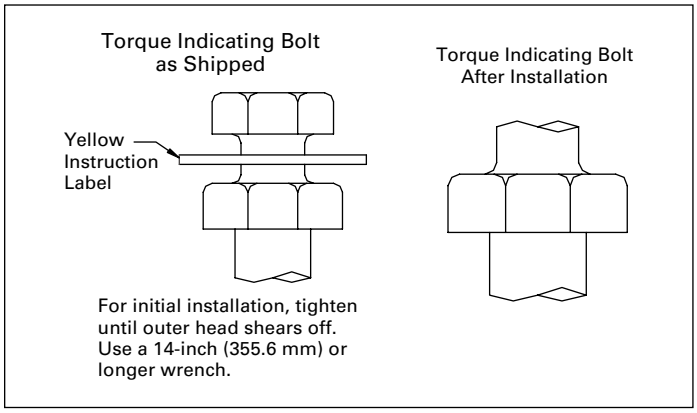

Figure 24.1-72. Torque Indicating Bolt

Note: For maintenance or relocation torque from 55 to 65 ft lbs using a torque wrench.

Final Field Fit Program

A field fit section of busway is typically an elbow or a short length of feeder that is intentionally left out of a run for later shipment. It is most often a mutually agreed upon section between the customer and the plant. The purpose of the program is to effectively manage the dimensional uncertainties that may be involved in a busway layout.

The example shown in **Figure 24.1-73** identifies the field fit piece as item F01, a straight length.

Upon release of the order, this item is kept on hold for field measurement. The contractor installs the busway (Items A01 through A04) and is then able to obtain an exact dimension for the final field fit piece, Item F01. The measurement should be made from the edge of the housing of A01 to the edge of the housing A02.

The contractor can fax the dimensions directly to the factory on the Final Field Fit Fax Release form, which is packed with the original shipment. The field fit section will ship in expedited lead time. Contact plant for current lead times.

The Final Field Fit Program allows for busway runs to be released when certain dimensions are not yet determined. It also eliminates the costly delays that can occur when sections have to be remade and shipped due to last-minute job site changes. In turn, this allows for installations to begin early and projects can be completed on time.

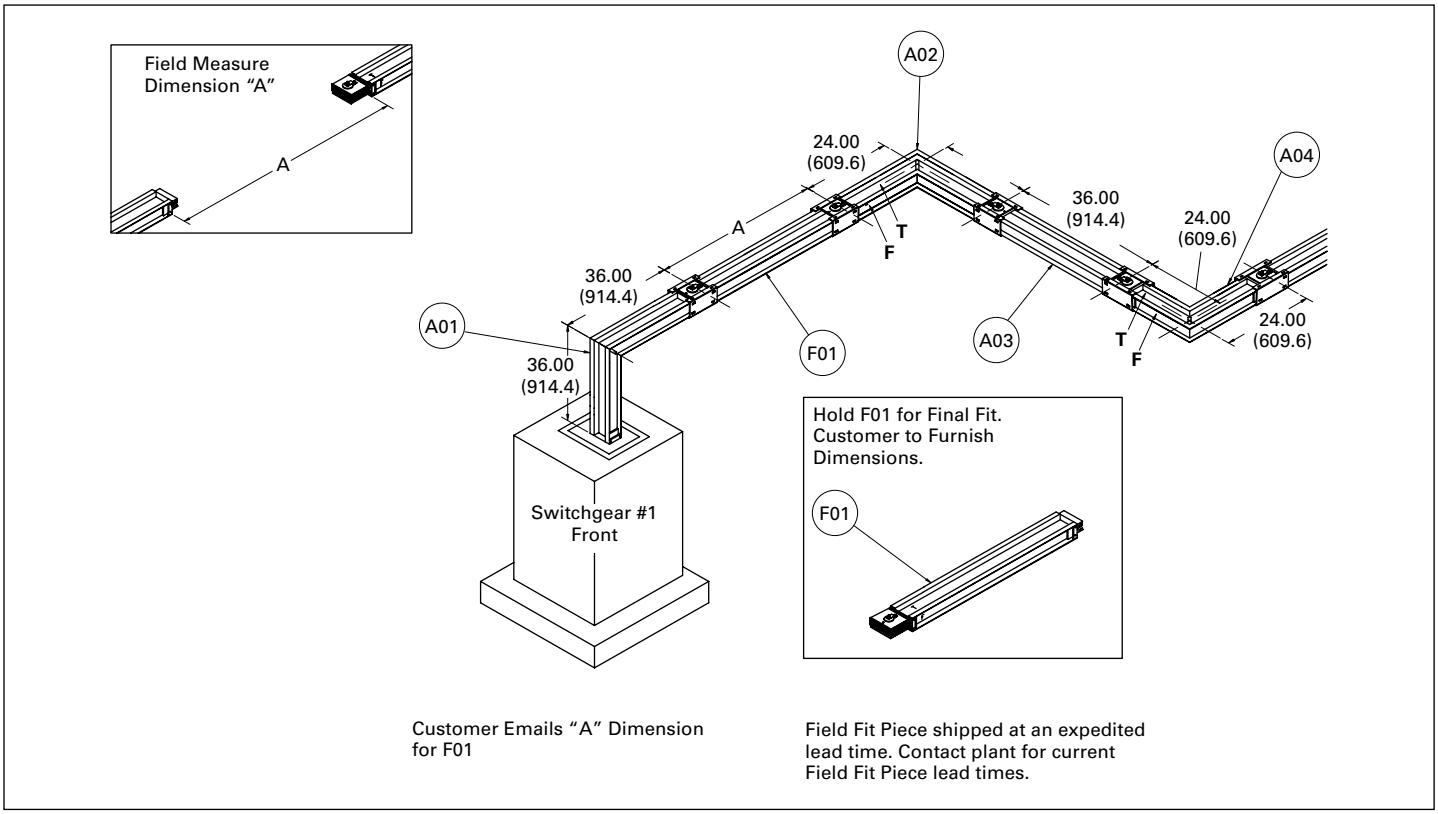

Figure 24.1-73. Final Field Fit Program

Bus Duct Electrical Data

Table 24.1-49. Short-Circuit Rating

UL 857 Ampere Rating	6-Cycle rms Symmetrical Short-Circuit Rating		Maximum Class L Fuse Needed to Achieve 6-Cycle rms Series Rating	
	Plug-In	Feeder	100 kA	200 kA
Aluminum				
225	85,000	85,000	2000	1200
400	85,000	85,000	2000	1200
600	85,000	85,000	2000	1200
800	100,000	100,000	—	2500
1000	100,000	100,000	—	2500
1200	125,000	125,000	—	2500
1350	150,000	150,000	—	4000
1600	150,000	150,000	—	4000
2000	150,000	150,000	—	4000
2500	200,000	200,000	—	—
3200	200,000	200,000	—	—
4000	200,000	200,000	—	—
Copper				
225	85,000	85,000	2000	1600
400	85,000	85,000	2000	1600
600	85,000	85,000	2000	1600
800	85,000	85,000	2000	1600
1000	100,000	100,000	—	3000
1200	100,000	100,000	—	3000
1350	100,000	100,000	—	3000
1600	125,000	125,000	—	3000
2000	150,000	150,000	—	4000
2500	150,000	150,000	—	4000
3200	200,000	200,000	—	—
4000	200,000	200,000	—	—
5000	200,000	200,000	—	—

Table 24.1-50. Resistance, Reactance and Impedance—Aluminum

Milliohms per 100 feet (30.5 m) Line-to-Neutral Aluminum Plug-in and Feeder Busway			
UL 857 Ampere Rating	Resistance R	Reactance X	Impedance Z
225	4.38	1.17	4.54
400	4.38	1.17	4.54
600	4.38	1.17	4.54
800	2.67	0.99	2.84
1000	2.29	0.84	2.44
1200	1.76	0.64	1.87
1350	1.39	0.49	1.47
1600	1.25	0.43	1.32
2000	1.01	0.34	1.07
2500	0.71	0.27	0.76
3200	0.62	0.24	0.67
4000	0.50	0.19	0.54

Table 24.1-51. Resistance, Reactance and Impedance—Copper

Milliohms per 100 feet (30.5 m) Line-to-Neutral Copper Plug-in and Feeder Busway			
UL 857 Ampere Rating	Resistance R	Reactance X	Impedance Z
225	2.30	1.20	2.59
400	2.30	1.20	2.59
600	2.30	1.20	2.59
800	2.30	1.20	2.59
1000	1.67	0.95	1.93
1200	1.39	0.78	1.60
1350	1.20	0.66	1.37
1600	0.94	0.50	1.07
2000	0.76	0.39	0.85
2500	0.55	0.26	0.61
3200	0.47	0.31	0.57
4000	0.38	0.24	0.45
5000	0.27	0.16	0.32

Table 24.1-52. Resistance Values for Integral Housing Ground (Only) Milliohms Per 100 Feet (30.5 m)

UL 857 Ampere Rating	Aluminum Phase Conductors	Copper Phase Conductors
225	1.04	1.04
400	1.04	1.04
600	1.04	1.04
800	0.95	1.04
1000	0.92	0.99
1200	0.85	0.95
1350	0.72	0.92
1600	0.68	0.85
2000	0.61	0.72
2500	0.36	0.61
3200	0.34	0.43
4000	0.30	0.36
5000	—	0.30

Derating Chart for Higher Ambient Temperatures

Pow-R-Way III busway may be operated continuously at its assigned ratings without exceeding the maximum hot spot temperature rise of 55 °C, provided the ambient temperature does not exceed 40 °C. For higher ambient temperatures, the ratings should be reduced by applying the appropriate multiplier shown in the following chart.

Table 24.1-53. Higher Ambient Temperature Multipliers

Ambient Temperature °C	Multiplier
40	1.00
45	0.95
50	0.90
55	0.85
60	0.80
65	0.74
70	0.67

Line-to-Line Voltage Drop

The table below gives average three-phase voltage drop per 100 ft (30.5 m) at rated current and varying power factor. Line-to-neutral voltage drop is obtained by multiplying the line value by 0.577.

Table 24.1-54. Line-to-Line Voltage Drop

UL 857 Ampere Rating	Percent Power Factor										
	0	10	20	30	40	50	60	70	80	90	100
Copper											
225	0.47	0.55	0.62	0.68	0.75	0.80	0.85	0.89	0.91	0.92	0.80
400	0.83	0.97	1.10	1.23	1.34	1.44	1.53	1.60	1.65	1.65	1.45
600	1.25	1.47	1.67	1.87	2.05	2.21	2.35	2.47	2.54	2.56	2.26
800	1.66	1.97	2.26	2.53	2.79	3.03	3.24	3.40	3.52	3.57	3.18
1000	1.64	1.93	2.19	2.43	2.66	2.88	3.06	3.19	3.29	3.31	2.90
1200	1.61	1.90	2.16	2.41	2.64	2.85	3.03	3.17	3.27	3.29	2.90
1350	1.54	1.81	2.07	2.31	2.53	2.74	2.92	3.06	3.16	3.18	2.81
1600	1.39	1.65	1.89	2.11	2.32	2.52	2.68	2.82	2.91	2.95	2.62
2000	1.34	1.60	1.84	2.07	2.28	2.48	2.65	2.79	2.89	2.93	2.62
2500	1.15	1.39	1.61	1.82	2.01	2.20	2.36	2.49	2.59	2.64	2.39
3200	1.61	1.85	2.07	2.27	2.46	2.63	2.76	2.86	2.92	2.89	2.46
4000	1.67	1.92	2.16	2.38	2.58	2.76	2.91	3.02	3.08	3.07	2.62
5000	1.43	1.66	1.88	2.08	2.27	2.44	2.58	2.69	2.76	2.76	2.39
Aluminum											
225	0.46	0.61	0.76	0.90	1.03	1.17	1.29	1.40	1.50	1.58	1.54
400	0.81	1.09	1.36	1.62	1.87	2.11	2.34	2.55	2.74	2.88	2.81
600	1.21	1.66	2.10	2.52	2.93	3.33	3.70	4.04	4.35	4.61	4.55
800	1.37	1.73	2.08	2.41	2.73	3.03	3.31	3.55	3.76	3.90	3.69
1000	1.45	1.84	2.21	2.57	2.91	3.24	3.54	3.80	4.03	4.18	3.98
1200	1.33	1.69	2.03	2.36	2.68	2.98	3.25	3.50	3.70	3.85	3.65
1350	1.15	1.47	1.78	2.07	2.36	2.62	2.87	3.09	3.28	3.41	3.25
1600	1.20	1.55	1.87	2.19	2.49	2.78	3.04	3.28	3.48	3.63	3.46
2000	1.18	1.25	1.86	2.18	2.48	2.78	3.05	3.29	3.51	3.66	3.51
2500	1.19	1.49	1.78	2.05	2.32	2.57	2.80	2.99	3.16	3.27	3.07
3200	1.26	1.58	1.88	2.17	2.45	2.71	2.96	3.16	3.34	3.46	3.25
4000	1.31	1.66	1.99	2.30	2.61	2.89	3.16	3.39	3.59	3.72	3.52

Note: Voltage Drop = E3 I (R cos ø + X sin ø) Volts/100 ft (30.5 m)—concentrated load, where cos ø = power factor.
For plug-in distributed loads, divide the voltage drop by 2. See IEEE Standard 141-13-8.3.
Actual voltage drop for loads less than full rated current and different lengths may be calculated by multiplying the values from **Table 24.1-54** by (actual/rated current) x (actual length/100 ft [30.5 m]).

IEC Electrical Data

Table 24.1-55. IEC 439-2 Ratings—Copper

IEC 439 Ampere Rating	1-Second rms Symmetrical Short-Circuit Rating	Micro-Ohms Per Meter		
		Resistance R	Reactance X	Impedance Z
225	35,000	80.80	27.00	85.20
400	35,000	80.80	27.00	85.20
630	35,000	80.80	27.00	85.20
800	35,000	80.80	27.00	85.20
1000	35,000	80.80	27.00	85.20
1200	55,000	63.40	22.30	67.20
1400	65,000	50.80	22.60	55.60
1550	70,000	39.70	26.90	48.00
1800	80,000	29.40	22.90	37.30
2250	85,000	26.20	11.60	28.80
3000	100,000	17.80	9.12	20.00
3800	120,000	13.90	10.30	17.30
4500	120,000	13.10	7.05	14.90
5800	120,000	9.11	5.00	10.40

Table 24.1-56. Line-to-Line Voltage Drop (MV Per Meter)—Copper

IEC 439 Ampere Rating	Percent Power Factor					
	50	60	70	80	90	100
225	26.23	27.87	29.18	29.84	30.16	26.23
400	47.21	50.16	52.46	54.10	54.10	47.54
630	72.46	77.05	80.98	83.28	83.97	74.10
800	99.34	106.23	111.48	115.41	117.05	104.26
1000	94.43	100.59	104.59	107.87	108.52	95.08
1200	94.43	100.59	104.59	107.87	108.52	95.08
1400	93.44	99.34	103.93	107.21	107.87	95.08
1550	89.84	95.74	100.33	103.74	104.26	92.13
1800	82.62	87.87	92.46	95.41	96.72	85.90
2250	81.31	86.89	91.74	94.75	96.07	85.90
3000	72.13	77.38	81.64	84.92	86.56	78.36
3800	86.23	90.49	93.77	95.74	94.75	80.66
4500	90.49	95.41	99.21	100.98	100.66	85.90
5800	80.00	84.59	88.20	90.62	90.49	78.36

Note: For plug-in distributed loads, divide the voltage drop by 2. Actual voltage drop for loads less than full rated current and different lengths may be calculated by multiplying the values from **Table 24.1-56** by (actual/rated current) x (actual length/100 ft [30.5m]).

Housing Ground vs. Internal Ground

Eaton's Pow-R-Way III busway offers a variety of grounding options. Two of which are 50% integral housing ground and 50% internal ground.

The 50% internal ground option has a separate ground conductor internal to the housing, which is rated 50% of the phase conductor.

The integral housing ground is where the extruded aluminum housing is used as the ground path and no internal ground conductor is provided. The housing is UL listed as a 50% integral ground path. This type of ground path is as effective of a ground conductor as an internal ground bar. **Table 24.1-57** shows a cross-sectional comparison between the aluminum housing and internal ground bar. The integral housing ground provides a larger ground path, which is over 100% of the cross-sectional area of the phase conductors. **Figure 24.1-74** illustrates the difference between the two grounding options.

Table 24.1-57. Housing Ground vs. Internal Ground Comparison

Ampere Rating			Bar Size In Inches	Bar Per Phase	Cross-Sectional Area (sq-in)	
UL 857		IEC 439			Internal Ground	Housing Ground
Cu	Al	Cu				
225	225	225	0.125 x 1.63	1	0.20	2.37
400	400	400	0.125 x 1.63	1	0.20	2.48
600	—	630	0.125 x 1.63	1	0.20	2.48
800	630	1000	0.125 x 1.63	1	0.20	2.48
1000	—	1200	0.125 x 2.25	1	0.28	2.54
1200	800	1200	0.125 x 2.75	1	0.34	2.69
1350	1000	1550	0.125 x 3.25	1	0.41	2.83
1600	1200	1600	0.125 x 4.25	1	0.53	3.11
2000	1350	2250	0.125 x 5.50	1	0.69	3.46
—	1600	—	0.125 x 6.25	1	0.78	3.68
2500	2000	3000	0.125 x 8.00	1	1.00	4.17
3200	—	3200	0.125 x 4.25	2	1.06	6.22
4000	2500	4500	0.125 x 5.50	2	1.38	6.92
—	3200	—	0.125 x 6.25	2	1.56	7.36
5000	4000	5800	0.125 x 8.00	2	2.00	8.34

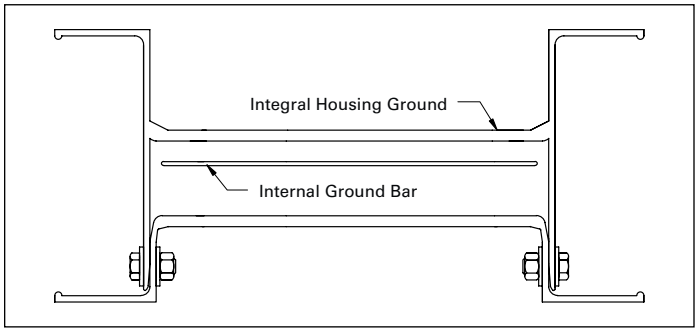

Figure 24.1-74. Housing Ground vs. Internal Ground

Plug-In Device Electrical Data

Table 24.1-58. Circuit Breakers
100% rated breakers are not available for use in bus plugs. Contact product line for guidance.

Ampere Rating	Interrupting Rating (kA Symmetrical)			Breaker Type
	240 Vac	480 Vac	600 Vac	
15–60	18	14	—	EHD
70–100	18	14	—	EHD
15–60	18	14	14	FDB
70–100	18	14	14	FDB
110–150	18	14	14	FDB
15–60	65	25	18	FD
70–100	65	25	18	FD
110–150	65	25	18	FD
175–225	65	25	18	FD
15–60	100	65	25	HFD
70–100	100	65	25	HFD
110–150	100	65	25	HFD
175–225	100	65	25	HFD
15–60	200	100	35	FDC
70–100	200	100	35	FDC
110–225	200	100	35	FDC
15–100	200	150	—	FCL
100–225	65	—	—	ED
100–225	100	—	—	EDH
100–225	200	—	—	EDC
70–225	65	35	18	JD, JDB
250	65	35	18	JD, JDB
70–225	100	65	25	HJD
250	100	65	25	HJD
70–225	200	100	35	JDC
250	200	100	35	JDC
125–250	200	200	—	LCL
250–400	65	—	—	DK
100–400	65	35	25	KD, KDB
100–400	100	65	35	HKD
100–400	200	100	50	KDC
200–400	200	200	—	LCL
300–600	65	35	25	LD, LDB
300–600	100	65	35	HLD
300–600	200	100	50	LDC
400–800	65	50	25	MDL
400–800	100	65	35	HMDL
400–800	65	50	25	ND
400–800	100	65	35	HND
400–800	200	100	50	NDC
600–1200	65	50	25	NGS
600–1200	100	65	35	NGH
600–1200	200	100	50	NGC

Table 24.1-59. Branch Devices Earth Leakage Ground Fault Circuit Breakers (Adjustable pickup from 30 mA to 30 A)

Ampere Rating	kAIC (Symmetrical)	Breaker Type
	480 Vac	
35–60	25	ELFD
70–100	25	ELFD
110–150	25	ELFD
35–60	65	ELHFD
70–100	65	ELHFD
110–150	65	ELHFD
35–60	100	ELFDC
70–100	100	ELFDC
110–150	100	ELFDC

Table 24.1-60. Integrally Fused, Current Limiting Circuit Breaker

Ampere Rating	Interrupting Rating (kA Symmetrical)			Breaker Type
	240 Vac	480 Vac	600 Vac	
15–100	200	200	200	FB-P
125–225	200	200	200	LA-P
250–400	200	200	200	LA-P
400–600	200	200	200	NB-P
700–800	200	200	200	NB-P

Table 24.1-61. Breaker Unit Catalog Numbering System

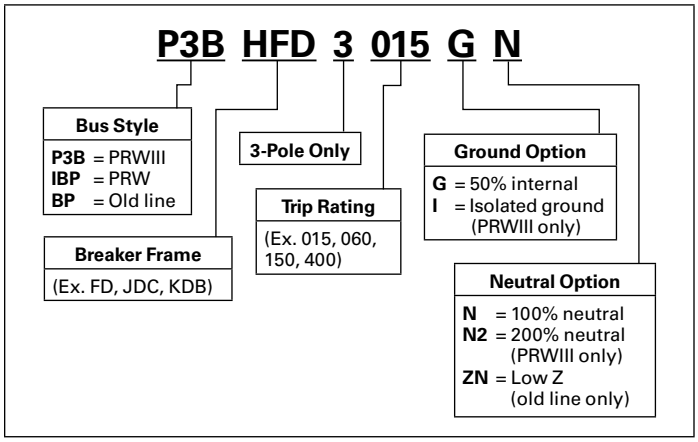

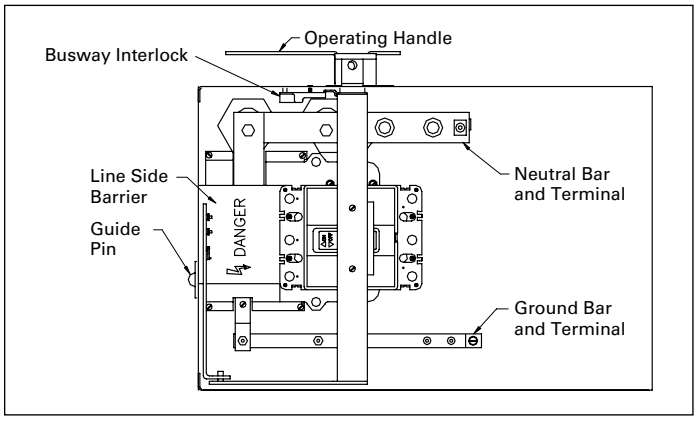

Figure 24.1-75. Typical Circuit Breaker Plug-In Unit

Note: Please call Greenwood Low Voltage Busway department for help in assigning a catalog number for a specific application. Do not leave spaces between characters. Example: P3BFD3225N; IBPKD3400N. All plug-in units come fully assembled.

Table 24.1-62. Fusible Switch Horsepower and Short-Circuit Rating (Based on Fuse Class)

Ampere Rating	NEC Standard	Maximum	Maximum Symmetrical rms at Fuse Class
240 V			
30	3	7.5	200 kA–R
60	7.5	15	200 kA–R
100	15	30	200 kA–R
200	25	60	200 kA–R
400	50	125	200 kA–R
600	75	200	200 kA–R
800	100	250	200 kA–L
480 V			
30	5	15	200 kA–R
60	15	30	200 kA–R
100	25	60	200 kA–R
200	50	125	200 kA–R
400	100	250	200 kA–R
600	150	400	200 kA–J
800	200	500	200 kA–L
600 V			
30	7.5	20	200 kA–R
60	15	50	200 kA–R
100	30	75	200 kA–R
200	60	150	200 kA–R
400	125	350	200 kA–J
600	200	500	200 kA–J
800	250	500	200 kA–L

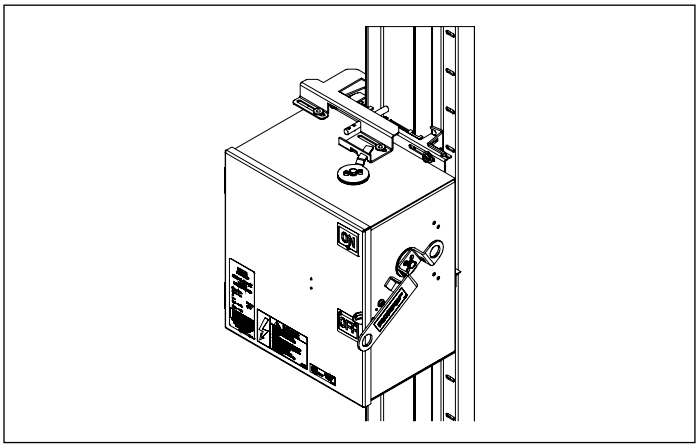

Figure 24.1-76. Vertically Mounted Plug

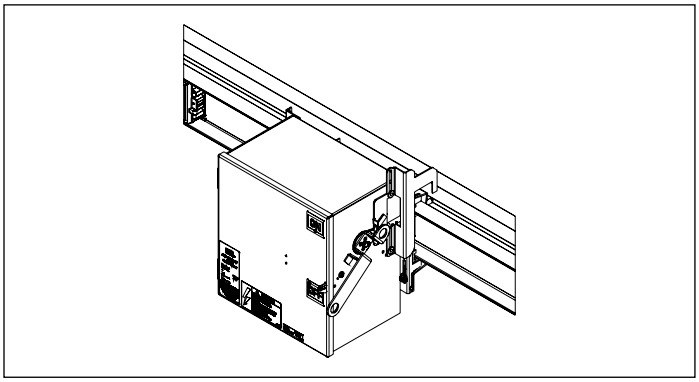

Figure 24.1-77. Horizontally Mounted Plug

Table 24.1-63. Fusible Unit Catalog Numbering System

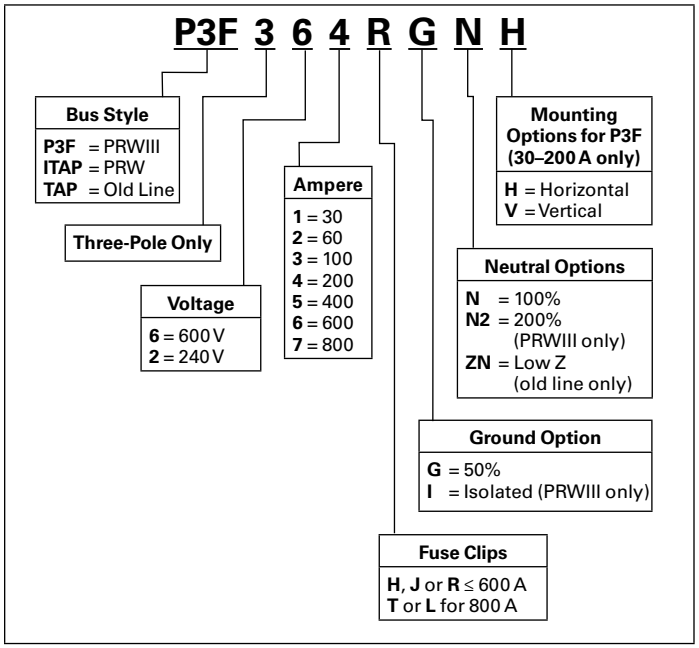

Note: Mounting option prefix used on 30 A, 60 A, 100 A and 200 A plug-in units only.

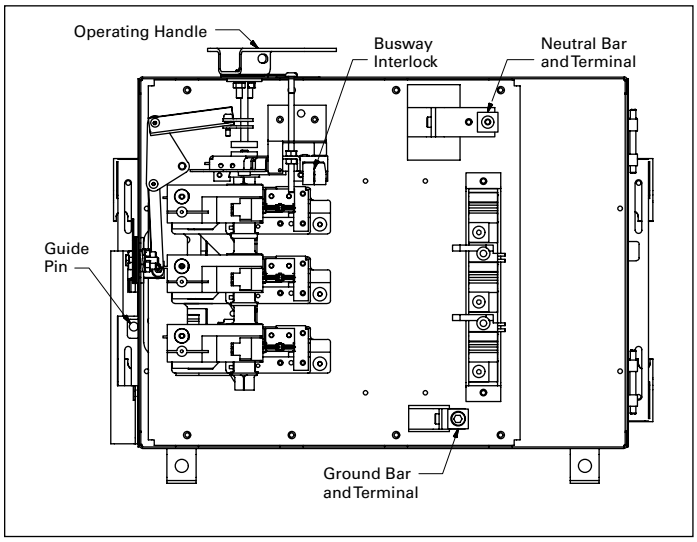

Figure 24.1-78. Typical Fusible Plug-In Unit

Note: "H" clips are standard for ITAP and TAP unless specified by adding "R" in catalog number. "R" clips are standard for P3F. Please call Greenwood Low Voltage Busway department for help in assigning a catalog number for a specific application. Do not leave spaces between characters. Example: P3F362RNV; ITAP361N. All plug-in units come fully assembled.

Bus Duct Physical Data

Dimensions—Bus Bar and Housing

Table 24.1-64. Three-Wire with No Neutral

Ampere Rating			Phase Bar Size (Depth and Width) Inches (mm)	Bar Per Phase	Conductor Configuration and Housing Size (Width x Height) Inches (mm)			
UL 857		IEC 439			50% Integral Housing Ground 3WH	50% Internal Ground Bus 3WHG ①	50% Internal Isolated Ground 3WI	Figure 24.1-79 ② Configuration
Cu	Al	Cu						
225	225	225	0.25 x 1.62 (6.4 x 41.1)	1	4.75 x 4.38 (120.7 x 111.3)	4.75 x 4.50 (120.7 x 114.3)	4.75 x 4.55 (120.7 x 115.6)	A
400	400	400	0.25 x 1.62 (6.4 x 41.1)	1	4.75 x 4.38 (120.7 x 111.3)	4.75 x 4.50 (120.7 x 114.3)	4.75 x 4.55 (120.7 x 115.6)	A
600	—	630	0.25 x 1.62 (6.4 x 41.1)	1	4.75 x 4.38 (120.7 x 111.3)	4.75 x 4.50 (120.7 x 114.3)	4.75 x 4.55 (120.7 x 115.6)	A
800	600	1000	0.25 x 1.62 (6.4 x 41.1)	1	4.75 x 4.38 (120.7 x 111.3)	4.75 x 4.50 (120.7 x 114.3)	4.75 x 4.55 (120.7 x 115.6)	A
1000	—	1200	0.25 x 2.25 (6.4 x 57.2)	1	5.38 x 4.38 (136.7 x 111.3)	5.38 x 4.50 (136.7 x 114.3)	5.38 x 4.55 (136.7 x 115.6)	A
1200	800	1400	0.25 x 2.75 (6.4 x 69.9)	1	5.88 x 4.38 (149.3 x 111.3)	5.88 x 4.50 (149.3 x 114.3)	5.88 x 4.55 (149.3 x 115.6)	A
1350	1000	1550	0.25 x 3.25 (6.4 x 82.6)	1	6.38 x 4.38 (162.1 x 111.3)	6.38 x 4.50 (162.1 x 114.3)	6.38 x 4.55 (162.1 x 115.6)	A
1600	1200	1800	0.25 x 4.25 (6.4 x 108.0)	1	7.38 x 4.38 (187.5 x 111.3)	7.38 x 4.50 (187.5 x 114.3)	7.38 x 4.55 (187.5 x 115.6)	A
2000	1350	2250	0.25 x 5.50 (6.4 x 139.7)	1	8.64 x 4.38 (219.5 x 111.3)	8.64 x 4.50 (219.5 x 114.3)	8.64 x 4.55 (219.5 x 115.6)	A
—	1600	—	0.25 x 6.25 (6.4 x 158.8)	1	9.40 x 4.38 (238.8 x 111.3)	9.40 x 4.50 (238.8 x 114.3)	9.40 x 4.55 (238.8 x 115.6)	A
2500	2000	3000	0.25 x 8.00 (6.4 x 203.2)	1	11.17 x 4.38 (283.7 x 111.3)	11.17 x 4.50 (283.7 x 114.3)	11.17 x 4.55 (283.7 x 115.6)	A
3200	—	3800	0.25 x 4.25 (6.4 x 108.0)	2	16.14 x 4.38 (410.0 x 111.3)	16.14 x 4.50 (410.0 x 114.3)	16.14 x 4.55 (410.0 x 115.6)	B
4000	2500	4500	0.25 x 5.50 (6.4 x 139.7)	2	18.64 x 4.38 (473.5 x 111.3)	18.64 x 4.50 (473.5 x 114.3)	18.64 x 4.55 (473.5 x 115.6)	B
—	3200	—	0.25 x 6.25 (6.4 x 158.8)	2	20.16 x 4.38 (512.1 x 111.3)	20.16 x 4.50 (512.1 x 114.3)	20.16 x 4.55 (512.1 x 115.6)	B
5000	4000	5800	0.25 x 8.00 (6.4 x 203.2)	2	23.70 x 4.38 (602.0 x 111.3)	23.70 x 4.50 (602.0 x 114.3)	23.70 x 4.55 (602.0 x 115.6)	B

① 100% ground available with same dimensions that use 50% internal ground and 50% internal housing ground.
② Refer to **Figure 24.1-79** on **Page 24.1-51** for configuration A and B.

Table 24.1-65. Four-Wire with 100% Neutral

Ampere Rating			Phase Bar Size (Depth and Width) Inches (mm)	Bar Per Phase	Conductor Configuration and Housing Size (Width x Height) Inches (mm)			
UL 857		IEC 439			50% Integral Housing Ground 4WH	50% Internal Ground Bus 4WHG ③	50% Internal Isolated Ground 4WI	Figure 24.1-79 ④ Configuration
Cu	Al	Cu						
225	225	225	0.25 x 1.62 (6.4 x 41.1)	1	4.75 x 4.38 (120.7 x 111.3)	4.75 x 4.50 (120.7 x 114.3)	4.75 x 4.55 (120.7 x 115.6)	A
400	400	400	0.25 x 1.62 (6.4 x 41.1)	1	4.75 x 4.38 (120.7 x 111.3)	4.75 x 4.50 (120.7 x 114.3)	4.75 x 4.55 (120.7 x 115.6)	A
600	—	630	0.25 x 1.62 (6.4 x 41.1)	1	4.75 x 4.38 (120.7 x 111.3)	4.75 x 4.50 (120.7 x 114.3)	4.75 x 4.55 (120.7 x 115.6)	A
800	600	1000	0.25 x 1.62 (6.4 x 41.1)	1	4.75 x 4.38 (120.7 x 111.3)	4.75 x 4.50 (120.7 x 114.3)	4.75 x 4.55 (120.7 x 115.6)	A
1000	—	1200	0.25 x 2.25 (6.4 x 57.2)	1	5.38 x 4.38 (136.7 x 111.3)	5.38 x 4.50 (136.7 x 114.3)	5.38 x 4.55 (136.7 x 115.6)	A
1200	800	1400	0.25 x 2.75 (6.4 x 69.9)	1	5.88 x 4.38 (149.3 x 111.3)	5.88 x 4.50 (149.3 x 114.3)	5.88 x 4.55 (149.3 x 115.6)	A
1350	1000	1550	0.25 x 3.25 (6.4 x 82.6)	1	6.38 x 4.38 (162.1 x 111.3)	6.38 x 4.50 (162.1 x 114.3)	6.38 x 4.55 (162.1 x 115.6)	A
1600	1200	1800	0.25 x 4.25 (6.4 x 108.0)	1	7.38 x 4.38 (187.5 x 111.3)	7.38 x 4.50 (187.5 x 114.3)	7.38 x 4.55 (187.5 x 115.6)	A
2000	1350	2250	0.25 x 5.50 (6.4 x 139.7)	1	8.64 x 4.38 (219.5 x 111.3)	8.64 x 4.50 (219.5 x 114.3)	8.64 x 4.55 (219.5 x 115.6)	A
—	1600	—	0.25 x 6.25 (6.4 x 158.8)	1	9.40 x 4.38 (238.8 x 111.3)	9.40 x 4.50 (238.8 x 114.3)	9.40 x 4.55 (238.8 x 115.6)	A
2500	2000	3000	0.25 x 8.00 (6.4 x 203.2)	1	11.17 x 4.38 (283.7 x 111.3)	11.17 x 4.50 (283.7 x 114.3)	11.17 x 4.55 (283.7 x 115.6)	A
3200	—	3800	0.25 x 4.25 (6.4 x 108.0)	2	16.14 x 4.38 (410.0 x 111.3)	16.14 x 4.50 (410.0 x 114.3)	16.14 x 4.55 (410.0 x 115.6)	B
4000	2500	4500	0.25 x 5.50 (6.4 x 139.7)	2	18.64 x 4.38 (473.5 x 111.3)	18.64 x 4.50 (473.5 x 114.3)	18.64 x 4.55 (473.5 x 115.6)	B
—	3200	—	0.25 x 6.25 (6.4 x 158.8)	2	20.16 x 4.38 (512.1 x 111.3)	20.16 x 4.50 (512.1 x 114.3)	20.16 x 4.55 (512.1 x 115.6)	B
5000	4000	5800	0.25 x 8.00 (6.4 x 203.2)	2	23.70 x 4.38 (602.0 x 111.3)	23.70 x 4.50 (602.0 x 114.3)	23.70 x 4.55 (602.0 x 115.6)	B

③ 100% ground available with same dimensions that use 50% internal ground and 50% internal housing ground.
④ Refer to **Figure 24.1-79** on **Page 24.1-51** for configuration A and B.

Dimensions—Bus Bar and Housing (Continued)

Table 24.1-66. Four-Wire with 200% Neutral

Ampere Rating			Phase Bar Size (Depth and Width) Inches (mm) ①	Bar Per Phase	Conductor Configuration and Housing Size (Width x Height) Inches (mm)			
UL 857		IEC 439			50% Integral Housing Ground 4WH	50% Internal Ground Bus 4WHG ②	50% Internal Isolated Ground 4WI	Figure 24.1-79 ③ Configuration
Cu	Al	Cu						
225	225	225	0.25 x 1.62 (6.4 x 41.1)	1	4.75 x 4.92 (120.7 x 125.0)	4.75 x 5.05 (120.7 x 128.2)	4.75 x 5.10 (120.7 x 129.5)	A
400	400	400	0.25 x 1.62 (6.4 x 41.1)	1	4.75 x 4.92 (120.7 x 125.0)	4.75 x 5.05 (120.7 x 128.2)	4.75 x 5.10 (120.7 x 129.5)	A
600	—	630	0.25 x 1.62 (6.4 x 41.1)	1	4.75 x 4.92 (120.7 x 125.0)	4.75 x 5.05 (120.7 x 128.2)	4.75 x 5.10 (120.7 x 129.5)	A
800	600	1000	0.25 x 1.62 (6.4 x 41.1)	1	4.75 x 4.92 (120.7 x 125.0)	4.75 x 5.05 (120.7 x 128.2)	4.75 x 5.10 (120.7 x 129.5)	A
1000	—	1200	0.25 x 2.25 (6.4 x 57.2)	1	5.38 x 4.92 (136.7 x 125.0)	5.38 x 5.05 (136.7 x 128.2)	5.38 x 5.10 (136.7 x 129.5)	A
1200	800	1400	0.25 x 2.75 (6.4 x 69.9)	1	5.88 x 4.92 (149.3 x 125.0)	5.88 x 5.05 (149.3 x 128.2)	5.88 x 5.10 (149.3 x 129.5)	A
1350	1000	1550	0.25 x 3.25 (6.4 x 82.6)	1	6.38 x 4.92 (162.1 x 125.0)	6.38 x 5.05 (162.1 x 128.2)	6.38 x 5.10 (162.1 x 129.5)	A
1600	1200	1800	0.25 x 4.25 (6.4 x 108.0)	1	7.38 x 4.92 (187.5 x 125.0)	7.38 x 5.05 (187.5 x 128.2)	7.38 x 5.10 (187.5 x 129.5)	A
2000	1350	2250	0.25 x 5.50 (6.4 x 139.7)	1	8.64 x 4.92 (219.5 x 125.0)	8.64 x 5.05 (219.5 x 128.2)	8.64 x 5.10 (219.5 x 129.5)	A
—	1600	—	0.25 x 6.25 (6.4 x 158.8)	1	9.40 x 4.92 (238.8 x 125.0)	9.40 x 5.05 (238.8 x 128.2)	9.40 x 5.10 (238.8 x 129.5)	A
2500	2000	3000	0.25 x 8.00 (6.4 x 203.2)	1	11.17 x 4.92 (283.7 x 125.0)	11.17 x 5.05 (283.7 x 128.2)	11.17 x 5.10 (283.7 x 129.5)	A
3200	—	3800	0.25 x 4.25 (6.4 x 108.0)	2	16.14 x 4.92 (410.0 x 125.0)	16.14 x 5.05 (410.0 x 128.2)	16.14 x 5.10 (410.0 x 129.5)	B
4000	2500	4500	0.25 x 5.50 (6.4 x 139.7)	2	18.64 x 4.92 (473.5 x 125.0)	18.64 x 5.05 (473.5 x 128.2)	18.64 x 5.10 (473.5 x 129.5)	B
—	3200	—	0.25 x 6.25 (6.4 x 158.8)	2	20.16 x 4.92 (512.1 x 125.0)	20.16 x 5.05 (512.1 x 128.2)	20.16 x 5.10 (512.1 x 129.5)	B
5000	4000	5800	0.25 x 8.00 (6.4 x 203.2)	2	23.70 x 4.92 (602.0 x 125.0)	23.70 x 5.05 (602.0 x 128.2)	23.70 x 5.10 (602.0 x 129.5)	B

① Neutral bar is 0.5 (12.7) x Width shown.
② 100% ground available with same dimensions that use 50% internal ground and 50% integral housing ground.
③ Refer to **Figure 24.1-79** for Configuration A and B.

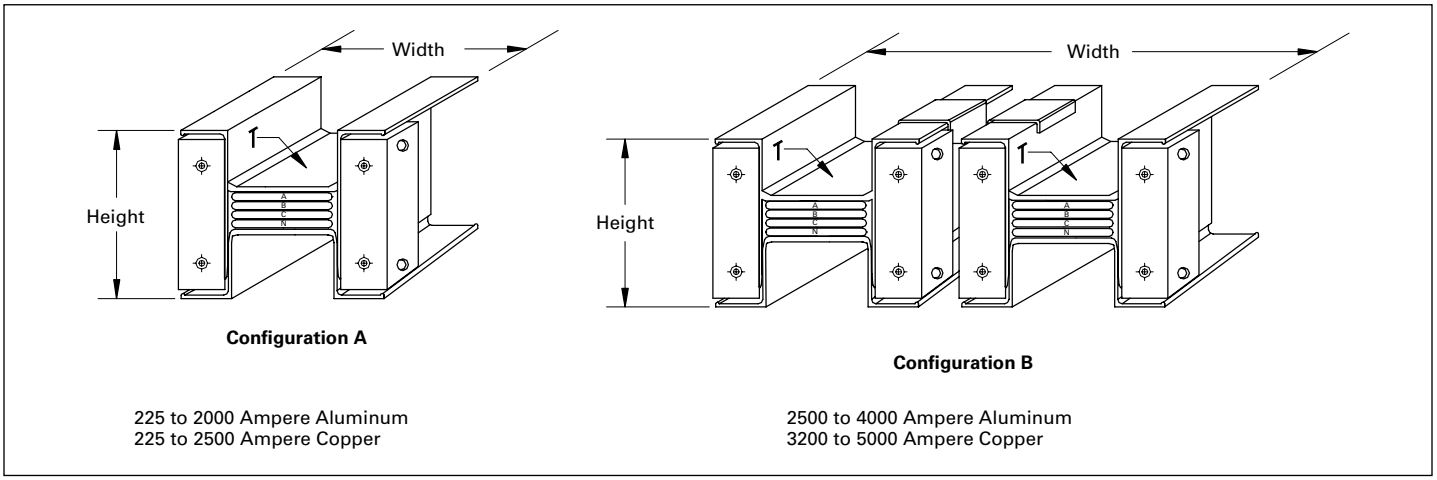

Figure 24.1-79. Pow-R-Way III Cross-Section Dimensions

Weights

Table 24.1-67. Weight (lb ft) and Current Density (Amperes/in²)

Ampere Rating			Current Density Amperes/In²			Weight—Including Integral Housing Ground (lb ft)							
UL 857		IEC 439	UL 857		IEC 439	Three-Wire		Four-Wire 100% Neutral		Four-Wire 200% Neutral		Add for Internal Ground	
Cu	Al	Cu	Cu	Al	Cu	Cu	Al	Cu	Al	Cu	Al	Cu	Al
225	225	225	554	554	554	8	5	10	6	11	7	0.78	0.23
400	400	400	985	985	985	8	5	10	6	11	7	0.78	0.23
600	—	630	1477	—	1477	8	—	10	—	11	—	0.78	—
800	600	1000	1969	1477	2469	8	5	10	6	11	7	0.78	0.23
1000	1000	1200	1778	—	2133	10	—	12	—	14	—	1.08	—
1200	800	1400	1745	1164	2036	12	6	15	7	17	8	1.33	0.40
1350	1000	1550	1662	1231	1908	14	7	17	8	20	9	1.57	0.47
1600	1200	1800	1506	1129	1694	17	8	21	10	25	11	2.05	0.62
2000	1350	2250	1455	982	1636	23	11	28	12	33	13	2.66	0.80
—	1600	—	—	1024	—	—	12	—	13	—	15	—	0.91
2500	2000	3000	1250	1000	1500	29	14	36	16	42	18	3.87	1.17
3200	—	3800	1505	—	1788	34	—	42	—	49	—	4.11	—
4000	2500	4500	1455	909	1636	45	21	56	24	66	27	5.32	1.61
—	3200	—	—	1024	—	—	23	—	26	—	29	—	1.83
5000	4000	5800	1250	1000	1450	63	28	72	32	85	36	7.74	2.35

Table 24.1-68. Weight (kg/M) and Current Density (Amperes/cm²)

Ampere Rating			Current Density Amperes/cm²			Weight—Including Integral Housing Ground (kg/m)							
UL 857		IEC 439	UL 857		IEC 439	Three-Wire		Four-Wire 100% Neutral		Four-Wire 200% Neutral		Add for Internal Ground	
Cu	Al	Cu	Cu	Al	Cu	Cu	Al	Cu	Al	Cu	Al	Cu	Al
225	225	225	86	86	86	12	7	15	9	17	11	1.17	0.35
400	400	400	153	153	153	12	7	15	9	17	11	1.17	0.35
600	—	630	229	—	229	12	—	15	—	17	—	1.17	—
800	600	1000	305	229	380	12	7	15	9	17	11	1.17	0.35
1000	—	1200	276	—	328	15	—	18	—	21	—	1.62	—
1200	800	1400	270	180	313	18	9	22	11	26	12	1.98	0.60
1350	1000	1550	258	191	293	21	11	25	12	30	14	2.34	0.71
1600	1200	1800	233	175	260	25	12	32	15	37	16	3.06	0.92
2000	1350	2250	226	152	233	34	16	42	18	49	20	3.96	1.20
—	1600	—	—	159	—	—	18	—	20	—	22	—	1.36
2500	2000	3000	194	155	231	43	21	54	24	63	27	5.76	1.75
3200	—	3800	233	—	275	51	—	63	—	73	—	6.12	—
4000	2500	4500	226	140	252	67	32	83	36	98	40	7.92	2.40
—	3200	—	—	149	—	—	34	—	39	—	43	—	2.73
5000	4000	5800	194	155	223	94	42	108	48	126	54	11.53	3.50

Application Note

The table below is meant to help the user and specifier select the higher busway ratings to meet the performance specification of a current density value no higher than 1000 A per square inch. The current density values of our standard busway offerings based upon temperature rise are listed in the 5th and 8th columns of the table. These ratings are UL listed and labeled, and safe to apply. However, certain jurisdictions or applications require a better margin of safety, and choose to use a 1000 A/sq-in density standard.

When the lower than standard densities are required, such as 1000 A/sq-in, then the only option is to oversize the busway from the standard bar sizes and ampacity ratings. Oversizing provides more bus bar material in cross-sectional area, and results in lower current densities and lower temperature rises for a given value of load current.

To calculate standard density:

1600 A copper has a 1506 standard density.

$$\text{Standard density} = \frac{\text{Ampere rating}}{\text{Bar size} \times \text{thickness}} = \frac{1600}{4.25 \times 0.25} = 1506\ \frac{A}{in^2}$$

To calculate upsize density:

1600 A copper requires a 2500 A size bar for a 1000 A/sq-in density.

$$\text{Upsize density} = \frac{1600}{8 \times 0.25} = 800\ \frac{A}{in^2}$$

The $800\ \frac{A}{in^2}$ density is **below** the 1000 A/sq-in requirement.

Why not just oversize to 2000 A busway? The 2000 A bar size is 0.25 in x 5.50 in or 1.375 sq-in Computing the new density yields 1600 A/1.375 sq-in = 1164 A/sq-in which is higher than the desired value of no greater density than 1000 A/sq-in.

Therefore, the table provides a quick method of determining the ampacity of busway required to meet current density values no greater than 1000 A/sq-in for given values of load current. The most important columns of data are the 1st, 7th and 10th.

Eaton warrants that the Pow-R-Way III product will perform as intended regardless of the method of selection, either temperature rise only or current density. Eaton encourages specifiers who use current density as the criteria for busway selection to select and specify the busway ratings recommended in the above table under the Adjusted Rating column, and not rely upon the contractors or bidders to resolve the matter in the later stages of a project. If sizing busway is strictly based upon current density, do not specify or use the standard ampacity values based upon the UL and NEMA temperature rise standard on Contract Drawings.

Table 24.1-69. Ampere Ratings Needed to be at or Below 1000 A/sq-in Density

Ampere Rating		Bar Size	Cu			Al		
UL 857			Standard Density	1000 A/sq-in Density	Adjusted Rating	Standard Density	1000 A/sq-in Density	Adjusted Rating
Cu	Al							
225	225	1.62	556	556	None	556	556	None
400	400	1.62	988	988	None	988	988	None
600	—	1.62	1481	873	1200	—	—	—
800	600	1.62	1975	985	1350	1481	873	800
1000	—	2.25	1778	941	1600	—	—	—
1200	800	2.75	1745	873	2000	1164	985	1000
1350	1000	3.25	1662	982	2000	1231	941	1200
1600	1200	4.25	1506	800	2500	1129	873	1350
2000	1350	5.50	1455	1000	2500	982	864	1600
—	1600	6.25	—	—	—	1024	800	2000
2500	2000	8.00	1250	909	4000	1000	1000	None
3200	—	2.00 x 4.25	1506	800	5000	—	—	—
4000	2500	2.00 x 5.50	1455	1000	5000	909	909	None
—	3200	2.00 x 6.25	—	—	—	1024	800	4000
5000	4000	2.00 x 8.00	1250	N/A	N/A	1000	1000	None

Plug-In Device Physical Data

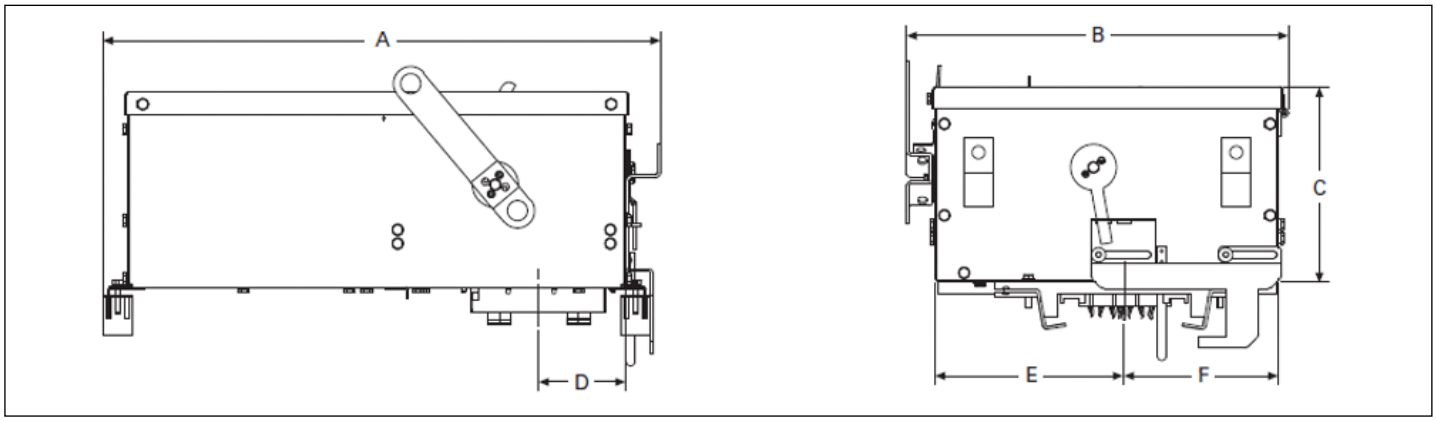

Figure 24.1-80. Power Defense Bus Plugs

Table 24.1-70. Plug-In Device Physical Data

Catalog Number	Max. Amperes	Max. Vac	Dimensions in Inches (mm)						Standard Mechanical Terminal			
			(A)	(B)	(C)	(D)	(E)	(F)	Wire Range per Phase (mm²)	Ground Wire Range	100% Neutral Wire Range	Approx. Weight lb (kg)
Plug-In Unit												
P3BPDG2	225	600	21.20 (538.5)	12.36 (314.0)	5.43 (138.0)	4.00 (101.6)	6.25 (158.8)	6.06 (153.7)	15–100 A (1) #14–1/0 (2.5–50) 110–225 A (1) #4–4/0 (25–95)	15–125 A #14–1/0 150–225 A 1/0–4/0	15–125 A #14–1/0 150–225 A 1/0–4/0	25 (11.3)
P3BPDG2LFD	150	600	21.20 (538.5)	12.36 (314.0)	5.43 (138.0)	4.00 (101.6)	6.25 (158.8)	6.06 (153.7)	15–70 A (1) #14–1/0 (2.5–50) 80–150 A (1) #4–4/0 (25–95)	15–70 A #14–1/0 80–150 A 1/0–4/0	15–70 A (1) #14–1/0 (2.5–50) 80–150 A (1) #4–4/0 (25–95)	27 (12.25)
Fitting												
P3BPDG3A (Plug In)	400	600	35.05 (890.3)	18.01 (457.5)	10.18 (258.6)	4.00 (101.6)	7.60 (192.9)	7.46 (189.6)	70–250 A (1) #3–350 kcmil (35–185) 300–350 A 250–500 kcmil (120–240) 400 A (2) 3/0–250 kcmil (95–120)	70–400 A #14–1/0	70–225 A #6–350 kcmil 250–400 A #4–600 kcmil	81 (36.75)
P3BPDG3BOA (Bolt On)	400	600	33.28 (845.3)	25.91 (658.1)	10.78 (273.8)	—	—	11.50 (292.1)	70–250 A (1) #3–350 kcmil (35–185) 300–350 A 250–500 kcmil (120–240) 400 A (2) 3/0–250 kcmil (95–120)	70–400 A #14–1/0	70–225 A #6–350 kcmil 250–400 A #4–600 kcmil	

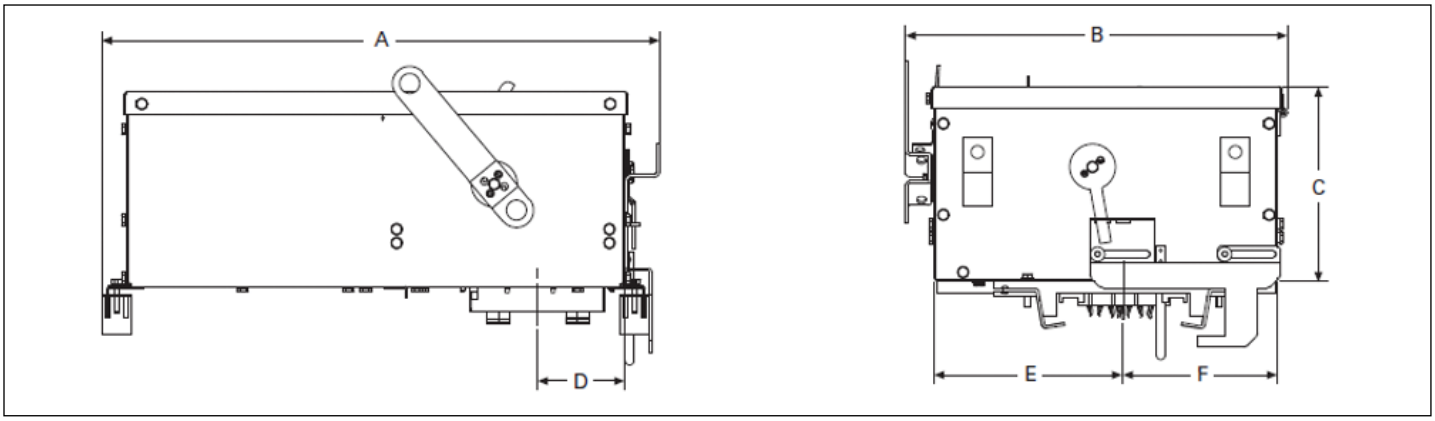

Figure 24.1-81. Power Defense Bus Plugs

Table 24.1-70. Plug-In Device Physical Data, Continued

Catalog Number	Max. Amperes	Max. Vac	Dimensions in Inches (mm)						Standard Mechanical Terminal			
			(A)	(B)	(C)	(D)	(E)	(F)	Wire Range per Phase (mm²)	Ground Wire Range	100% Neutral Wire Range	Approx. Weight lb (kg)
Plug-In Unit												
P3BPDG4	800	600	45.89 (1165.6)	19.65 (499.1)	10.15 (257.8)	4.00 (101.6)	17.38 (441.5)	9.83 (249.7)	300–600 A (2) #1–500 kcmil (50–240) 700–800 A (3) 3/0–400 kcmil (95–185)	300–800 A #4–600 kcmil	300–800 A #4–600 kcmil	136 (61.7)
P3BPDG4BO	800	600	54.62 (1387.4)	24.74 (628.4)	9.97 (253.2)	—	—	9.94 (252.5)	300–600 A (2) #1–500 kcmil (50–240) 700–800 A (3) 3/0–400 kcmil (95–185)	300–800 A #4–600 kcmil	300–800 A #4–600 kcmil	
P3BPDG5	800	600	45.89 (1165.6)	19.65 (499.1)	10.15 (257.8)	4.00 (101.6)	17.38 (441.5)	9.83 (249.7)	400–700 A (2) #1–500 kcmil (50–240) 800 A (3) 3/0–400 kcmil (120–240)	400–800 A #4–600 kcmil	400–700 A (2) #1–500 kcmil (50–240) 800 A (3) 3/0–400 kcmil (120–240)	161.5 (73.25)
P3BPDG5BO	1200	600	43.14 (1095.8)	25.80 (655.4)	12.95 (328.9)	—	—	11.50 (292.1)	400–700 A (2) #1–500 kcmil (50–240) 800 A (3) 3/0–400 kcmil (120–240) 900–1200 A (4) 4/0–400 kcmil (107–203)	400–1200 A (2) 3/0–600 kcmil	400–700 A (2) #1–500 kcmil (50–240) 800 A (3) 3/0–400 kcmil (120–240) 900–1200 A (4) 4/0–400 kcmil (107–203)	

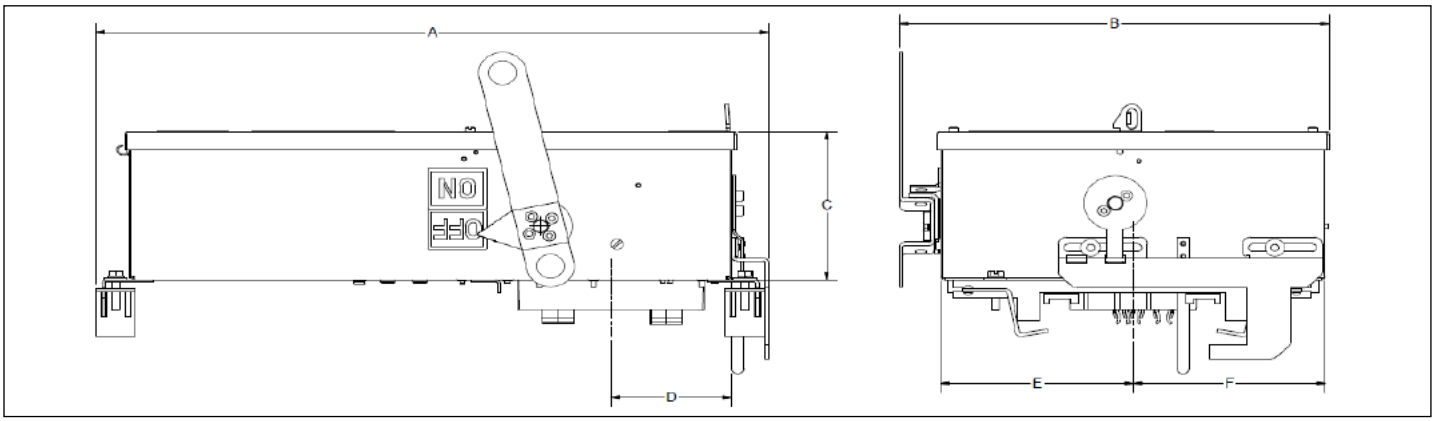

Figure 24.1-82. Bus Plugs

Table 24.1-71. Standard Plug-In Units

Plug-In Unit Catalog Number	Plug-In Unit Style Number	Maximum Amperes	Maximum Vac	Dimensions in Inches (mm)					
				(A)	(B)	(C)	(D)	(E)	(F)
Circuit Breaker Plug-in Units									
P3BFD	BPC2001	225	600	21.19 (538.2)	13.56 (344.4)	5.43 (137.9)	3.80 (96.5)	6.06 (153.9)	6.05 (153.7)
P3BJD	BPC2002	250	600	23.27 (591.1)	13.59 (345.2)	6.96 (176.8)	3.81 (96.8)	6.06 (153.9)	6.05 (153.7)
Fusible Plug-in Units									
P3F321R	BPC3001G01	30	240	22.76 (578.1)	13.62 (345.9)	5.42 (137.7)	3.80 (96.5)	6.06 (153.9)	6.05 (153.7)
P3F321RGH	BPC5430G13	30	240	14.74 (374.4)	13.92 (353.6)	8.46 (214.9)	3.85 (97.8)	7.95 (201.9)	5.66 (143.8)
P3F321RGV	BPC5465G13	30	240	15.85 (402.6)	14.05 (356.9)	8.46 (214.9)	3.85 (97.8)	6.72 (170.7)	5.66 (143.8)
P3F361RGV	BPC5465G03	30	240	15.85 (402.6)	14.05 (356.9)	8.46 (214.9)	3.85 (97.8)	6.72 (170.7)	5.66 (143.8)
P3F365HR	BPD5000G03	30	600	23.60 (599.4)	22.72 (577.1)	20.95 (532.1)	3.81 (96.8)	10.45 (265.4)	10.46 (265.7)

Eaton
1000 Eaton Boulevard
Cleveland, OH 44122
United States
Eaton.com

©2025 Eaton
All Rights Reserved
Printed in USA
Publication No. DG017002EN / Z26367
March 2025

Eaton is a registered trademark.

All other trademarks are property of their respective owners.